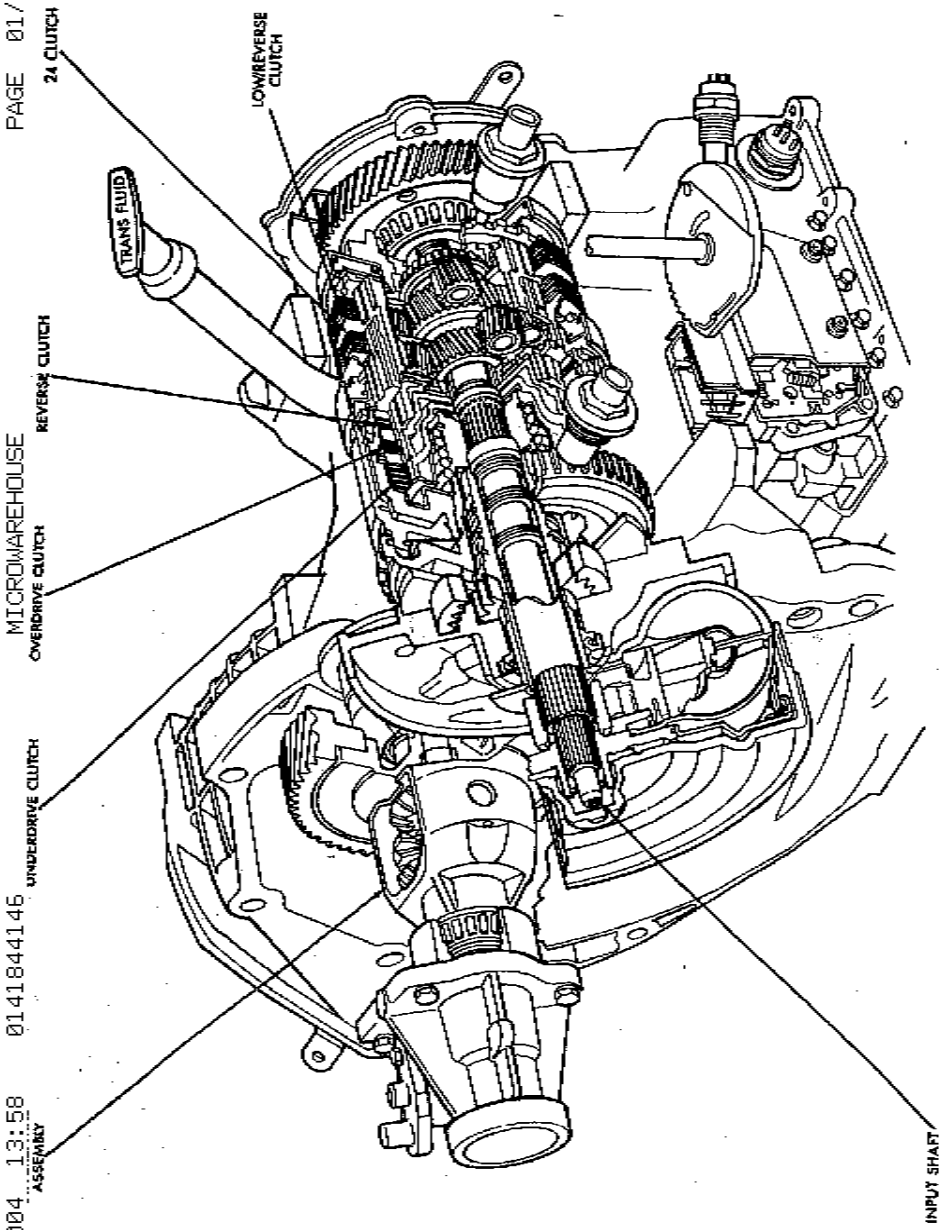








**When Checked:** Continuously when transaxle is in gear.

**Effect:** Transaxle limp-in (2nd gear).

**Note:** Errors in speed data are tolerated for some time before going into limp-in. However, once an error is detected, this sequence of events will be followed:

- Shifts are inhibited.
- Lock up operation is inhibited.
- Solenoid circuits are tested and, if they fail, are blamed for the speeds error.
- Limp-in (2nd gear).

**Probable Causes:**

| | Speed Error Code | | | | | | | | | |
|---|---|---|---|---|---|---|---|---|---|---|
| **Probable Causes** | **50** | **51** | **52** | **53** | **54** | **55** | **56** | **57** | **58** | |
| Open/shorted SO1 circuit | X | X | | | | | | | | |
| Defective Output Sensor | X | X | | | | | X | | | |
| Output Sensor Connector Problem | X | X | | | | | X | | | |
| 60-way Connector Problem | | | | | | | | | | |
| Cavity 13 | X | X | | | | | X | X | | |
| Cavity 14 | X | X | | | | | | X | | |
| Cavity 52 | X | X | | | | | X | | | |
| Open/shorted ST1 circuit | X | X | | | | | | | | |
| Defective Turbine Sensor | X | X | | | | | X | | | |
| Turbine Sensor Connector Problem | X | X | | | | | X | | | |
| Open SG5 circuit (Sensors Ground) | | | | | | | | | X | |
| Internal Controller Failure | X | X | | | | | X | X | X | |
| Internal Transaxle Problem | X | X | X | X | X | | | | | |

**Note:** Code 55 will not be seen in 1991. It is reserved for future use.

# Diagnosis and Tests

## AGNOSIS—GENERAL

**AUTION: Before attempting any repair on the A-604 ectronic Automatic Transaxle, always check for fault des with the DRBII using the "Powertrain Diagslic Test Procedure Manual (A-604)."**

Automatic transaxle malfunctions may be used by four general conditions: poor engine rformance, improper adjustments, hydraulic ılfunctions, mechanical malfunctions, and elecnic malfunctions. Diagnosis of these problems ould always begin by checking the easily acssible variables: fluid level and condition, gearft cable adjustment. Then perform a road test determine if the problem has been corrected that more diagnosis is necessary. If the probı exists after the preliminary tests and cortions are completed, hydraulic pressure checks uld be peformed.

### id Level and Condition

**he transmission and differential sump have a comı oil sump with a communicating opening been the two.**

ince this torque converter fills in both the Park and "N" Neutral positions, place the ctor level in "P" Park to be sure that the d level check is accurate. **The engine should unning at idle speed for at least one minute, with vehicle on level ground. This will assure com- oil level stabilization between differential and smission.** The fluid should be at normal oper- g temperature (approximately 82°C or 180°F). fluid level is correct if it is in the "HOT" on (cross-hatched area) on the oil level indir.

w fluid level can cause a variety of condi- because it allows the pump to take in air g with the fluid. As in any hydraulic system, oubbles make the fluid spongy, therefore, sures will be low and build up slowly.

proper filling can also raise the fluid level igh. When the transaxle has too much fluid, gears churn up foam and cause the same itions which occur with a low fluid level. either case, the air bubbles can cause overng, fluid oxidation, and varnishing, which can interfere with normal valve, clutch, and accumulator operation. Foaming can also result in fluid escaping from the transaxle vent where it may be mistaken for a leak.

Along with fluid level, it is important to check the condition of the fluid. When the fluid smells burned, and is contaminated with metal or friction material particles, a complete transaxle overhaul is needed. Be sure to examine the fluid on the dipstick closely. If there is any doubt about its condition, drain out a sample for a double check.

After the fluid has been checked, seat the dipstick fully to seal out water and dirt.

### Gearshift Linkage

Normal operation of the PRNDL and neutral safety switch provides a quick check to confirm proper manual linkage adjustment.

Move the selector level slowly upward until it clicks into the "P" Park notch in the selector gate. If the starter will operate the "P" position is correct.

After checking "P" position move the selector slowly toward "N" Neutral position until lever drops at the end of the "N" stop in the selector gate. If the starter will also operate at this point the gearshift linkage is properly adjusted. If adjustment is required, refer to gearshift linkage adjustment in Maintenance and Adjustments and refer to DRBII in the "Diagnostic Test Procedure Manual."

### Road Test

Prior to performing a road test, be certain that the fluid level and condition, and control cable adjustment have been checked and approved.

During the road test, the transaxle should be operated in each position to check for slipping and any variation in shifting.

In most cases, the clutch that is slipping can be determined by noting the transaxle operation in all selector positions and by comparing which internal units are applied in those positions. The "Elements in Use Chart" provides a basis for road test analysis.

The process of eliminating can be used to de-







| Code 47: | Solenoid Switch Valve (1991) (Stuck in the LR position) |
|---|---|
| **Background:** | The solenoid switch valve (SSV) controls the direction of the transmission fluid when the LR/LU solenoid is energized. The SSV will be in the down shiftedposition in 1st gear, thus directing the fluid to the LR element. In 2nd, 3rd and 4th, it will be in the upshifted position and directs the fluid into the lockup switch valve which controls torque converter lockup.<br><br>When doing partial lockup (PL) or full lockup (FL), the LR pressure switch should indicate no pressure if SSV is in the LU position. If LR pressure switch indicates pressure for some time while in PL or FL, lockup operation is aborted and inhibited to avoid inadvertent application of the LR clutch. |
| **Conditions To Set Code:** | - In partial or full lock up.<br>- Two back to back occurrences of LR pressure build up. |
| **When Checked:** | Continuously when doing partial or full lock up. |
| **Effect:** | Transaxle limp-in (2nd gear). |
| **Probable Causes:** | - Internal transaxle problem. |

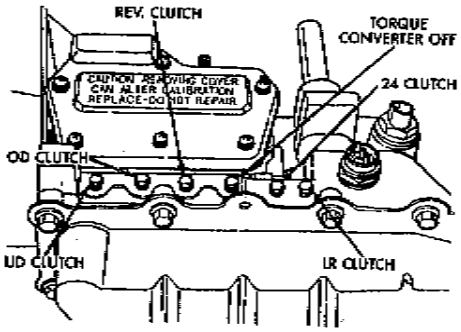


*Fig. 1—Pressure Taps*

***Test One (Selector in L—1st gear)***

(1) Attach pressure gauge to the low/reverse clutch tap.

(2) Move selector lever to the L position.

(3) Allow vehicle wheels to turn and increase throttle opening to achieve an indicated vehicle speed to 20 mph.

(4) Low/reverse clutch pressure should read 115 to 145 psi.

(5) This test checks pump output, pressure regulation and condition of the low/reverse clutch hydraulic circuit and shift schedule.

***Test Two (Selector in D—2nd gear)***

(1) Attach gauge to the underdrive clutch tap.

(2) Move selector lever to the D position.

(3) Allow vehicle wheels to turn and increase throttle opening to achieve an indicated vehicle speed of 30 mph.

(4) Underdrive clutch pressure should read 110 to 145 psi.

(5) This test checks the underdrive clutch hydraulic circuit as well as the shift schedule.

***Test Three (overdrive clutch check)***

(1) Attach gauge to the overdrive clutch tap.

(2) Move selector lever to the circle D position.

(3) Allow vehicle wheels to turn and increase throttle opening to achieve an indicated vehicle speed of 20 mph.

(4) Overdrive clutch pressure should read 74 to 95 psi.

(5) Move selector lever to the D position and increase indicated vehicle speed to 30 mph.

(6) The vehicle should be in second gear and overdrive clutch pressure should be less than 5 psi.

(7) This test checks the overdrive clutch hydraulic circuit as well as the shift schedule.

***Test Four (Selector in Circle D—overdrive gear)***

(1) Attach gauge to the 2/4 clutch tap.

(2) Move selector lever to the circle D position.

(3) Allow vehicle front wheels to turn and increase throttle opening to achieve an indicated vehicle speed of 30 mph.

(4) The 2/4 clutch pressure should read 75 to 95 psi.

(5) This test checks the 2/4 clutch hydraulic circuit.

***Test Five (Selector in circle D—overdrive lockup)***

(1) Attach gauge to the lockup off pressure tap.

(2) Move selector lever to the circle D position.

(3) Allow vehicle wheels to turn and increase throttle opening to achieve an indicated vehicle speed to 50 mph.

**Caution: Both wheels must turn at the same speed.**

(4) Lockup off pressure should be less than 5 psi.

(5) This test checks the lockup clutch hydraulic circuit.

***Test Six (Selector in Reverse)***

(1) Attach gauge to the reverse clutch tap.

(2) Move selector lever to the reverse position.

(3) Read reverse clutch pressure with output stationary (foot on brake) and throttle opened to achieve 1500 rpm.

(4) Reverse clutch pressure should read 165 to 235 psi.

(5) This test checks the reverse clutch hydraulic circuit.

***Test Result Indications***

(1) If proper line pressure is found in any one test, the pump and pressure regulator are working properly.

(2) Low pressure in all positions indicates a defective pump, a clogged filter, or a stuck pressure regulator valve.

(3) Clutch circuit leaks are indicated if pressures do not fall within the specified pressure range.

(4) If the overdrive clutch pressure is greater than 5 psi in step 6 of Test Three, a worn reaction shaft seal ring is indicated.





| Code 45: | Internal A-604 Controller (EEPROM Memory Failure) |
|---|---|

**Background:** The A-604 transmission system supports several engine models, each requiring different shift schedule and calibration constants. The EATX controller receives the engine model code from the engine controller and stores it in the microprocessor's EEPROM memory. Once the engine model code is established in the EEPROM memory, it is used thereafter to select the appropriate shift schedule and other calibrations.

The EEPROM memory location used for the engine model code is checked to verify its ability to hold data. If this EEPROM memory location fails the checks, the code is set.

**Conditions To Set Code:**
- A new transaxle controller is installed.
- C²D bus is operational.
- The EEPROM memory location used to store engine model fails the checks (data read from it doesn't match data written to it).

**When Checked:** After a reset (ignition key turned to the RUN position or after cranking engine).

**Effect:** No limp-in.

**Probable Causes:** Internal controller failure.

## DEFAULT CODE CHART "A"

| Condition | 21 OD clutch—Pressure too low | 22 2/4 clutch—Pressure too low | 23 2/4 clutch and OD clutch—Pressures too low | 24 L/R clutch—Pressure too low | 25 L/R clutch and OD clutch—pressures too low | 26 L/R clutch and 2/4 clutch—pressures too low | 27 OD, 2/4, and L/R clutches—pressures too low | 31 OD clutch pressure switch response failure | 32 2/4 pressure switch response failure | 33 2/4 and OD clutch pressure response failures | 37 Solenoid switch valve failure | 38 Partial lockup control out of range | 39 Speed ratio default |
|---|---|---|---|---|---|---|---|---|---|---|---|---|---|
| Low fluid level | X | X | X | X | X | X | X | X | X | X | | | X |
| Aerated fluid (high fluid level) | X | X | X | X | X | X | X | X | X | X | | | |
| Worn or damaged reaction shaft support seal rings | X | | | | | | | | | | | | X |
| Worn or damaged input shaft seal rings | | | | | | | | | | | | X | X |
| Worn pump | X | X | X | X | X | X | X | X | X | X | | X | X |
| Damage or failed clutches: | | | | | | | | | | | | | |
| UD clutch | | | | | | | | | | | | | X |
| OD clutch | X | | | | | | | X | | | | | X |
| Reverse clutch | | | | | | | | | | | | | X |
| 2/4 clutch | | X | | | | | | | X | | | | X |
| L/R clutch | | | | X | | | | | | | | | X |
| Damaged clutch seals | X | X | X | X | X | X | X | | | | | | X |
| Worn or damaged accumulator seal rings | X | X | X | X | X | X | X | | | | | | X |
| Plugged filter | X | X | X | X | X | X | X | | | X | | | X |
| Stuck/sticky valves | X | X | X | X | X | X | X | | | | X | X | X |
| Solenoid switch valve | | | | | | | | | | | X | | |
| Lockup switch valve | | | | | | | | | | | | X | |
| Torque converter control valve | | | | | | | | | | | | X | |
| Regulator valve | X | X | X | X | X | X | X | | | | | | X |
| Valve body leakage | X | X | X | X | X | X | X | X | X | X | X | X | X |
| Pressures too high | X | X | X | X | X | X | X | | | | | X | X |
| Internal solenoid leak | X | X | X | X | X | X | X | X | X | X | X | X | X |
| Torque converter lockup clutch failure | X | X | X | X | X | X | X | X | | | | X | |
| Faulty cooling system | X | X | X | X | X | X | X | | | | | | X |
| Damaged speed sensor gear teeth | | | | | | | | | | | | | X |
| Planetary gearsets broken or seized | | | | | | | | | | | | | X |





**Code 38:** **Lockup Control**

**Background:** When in 2nd, 3rd or 4th gear, the torque converter can be locked when certain conditions are met. The LU piston is modulated (partial lock up) by modulating the LR/LU solenoid until the torque converter slip (difference between engine and turbine rpm) is within a desired range. Then the LR/LU solenoid is fully energized (full lockup).

**Conditions To Set Code:**
- Lock up conditions are met.
- The torque converter fails to lock up within the allowed time.
- Throttle less than 30 degrees.

Note: The general requirements for torque converter lock up are:
- Normal operating or high temperature.
- Brake is released.
- Throttle within proper range.
- No speed, pressure switch or throttle data error.
- Minimum vehicle speed which is a function of Shift Lever Position, gear, and engine temperature (eg. 46 mph with Shift Lever in OD and 4th gear).
- No Solenoid Switch Valve problem detected.

**When Checked:** When in partial lock up (PL).

**Effect:**
- No limp-in
- Lock up operation is inhibited.

**Probable Causes:**
- Low/high transaxle fluid.
- Internal transaxle problem.

**Code 39:** **Gear ratio error for 89/90. For 91 code 39 has been broken down into codes 50-59. Refer to fault codes 50 through 58 for gear ratio fault code explanations and probable causes.**

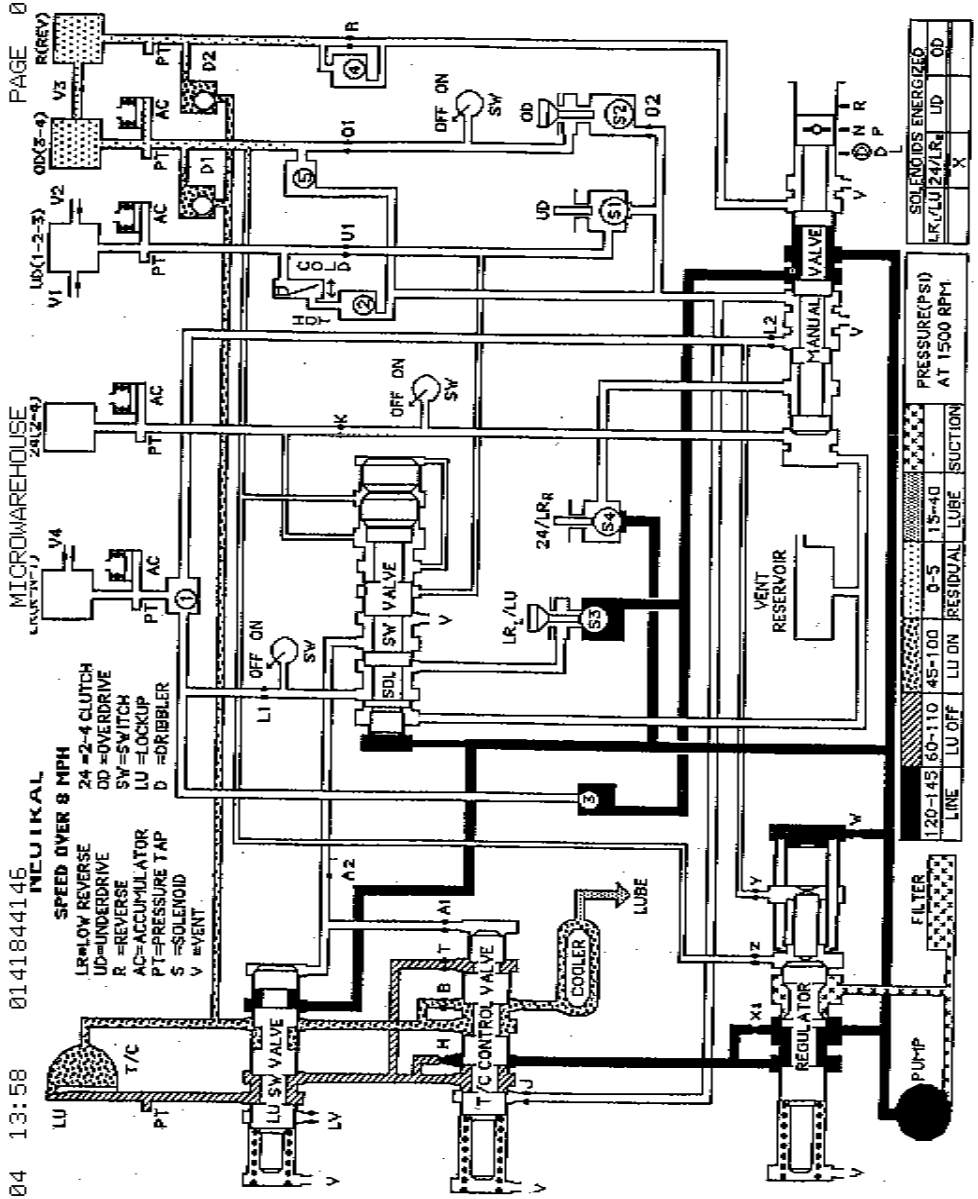






| Code 36: | Fault Immediately After Shift (1991) |
|---|---|

**Background:** This code is not stored alone. It is stored if a speed error (codes 50 through 58) is detected immediately after a shift.

The existence of code 36 indicates a mechanical or hydraulic (non-electrical) related problems. It should be noted, however, that all mechanical problems don't necessarily result in code 36.

When this code exists, diagnosing the system should be based on the associated code and ONLY mechanical causes should be considered first.

**Conditions To Set Code:** Speed Error detected immediately after a shift.

**When Checked:** Speed Error code is stored.

**Effect:** Same as the associated code.

**Probable Causes:** Internal transaxle problem (refer to Speed Errors).

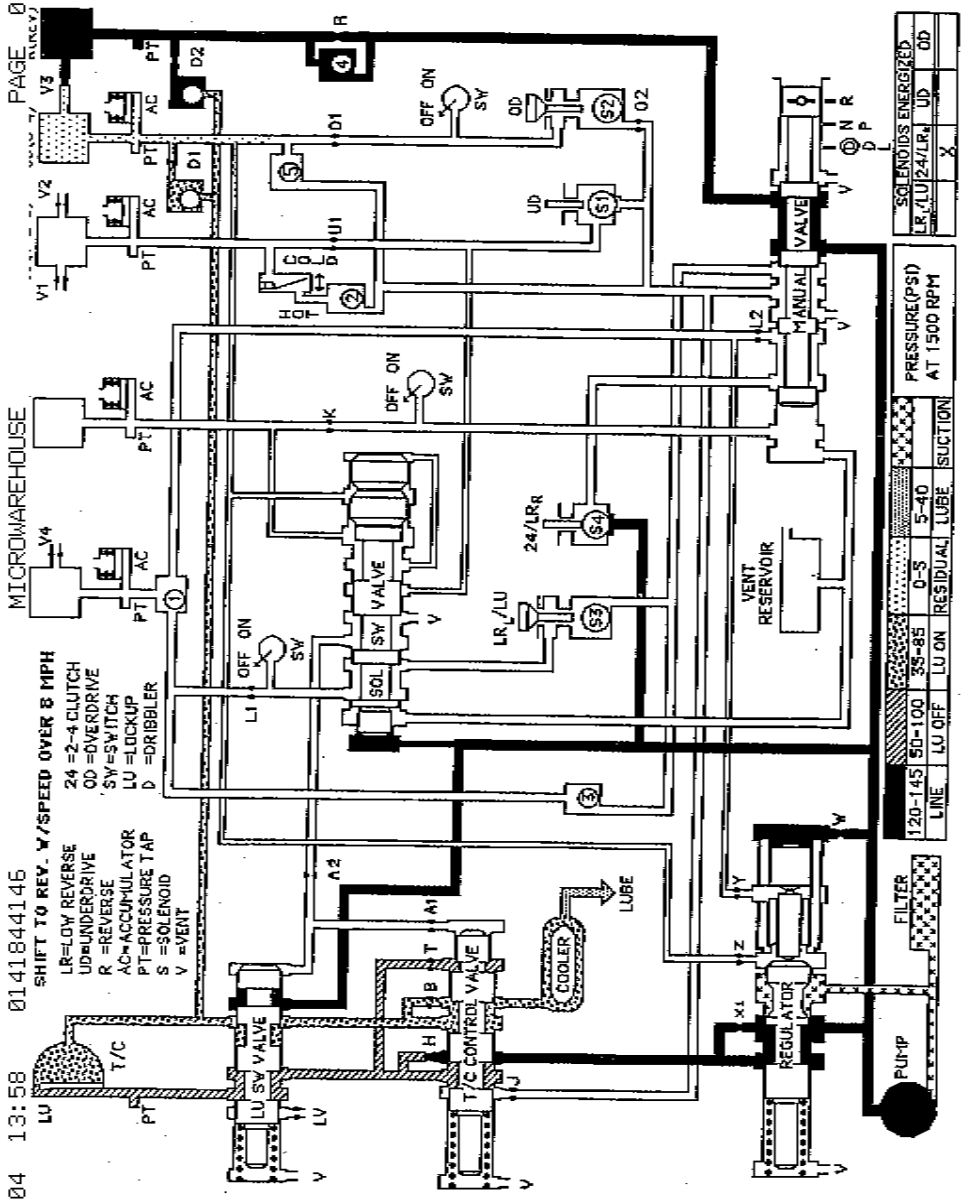






| Code 29: | Throttle Position Signal |
|---|---|

**Background:** The EATX controller receives the throttle signal (K7 circuit) and its ground (N5 circuit) from the Throttle Position Sensor (TPS). The TPS has a 5 volt pull up (K8 circuit) supplied by the engine controller. The throttle signal is checked for out-of-range as well as intermittency (excessive signal changes).

**Conditions To Set Code:**
- Throttle signal out-of range.

**When Checked:** Continuously.

**Effect:**
- No limp-in.
- A default throttle value is used.
- No lockup.
- No 4th gear.
- Limited shift schedule.
- Earlier coastdown shifts (ie. at higher speeds).

**Probable Causes:**
- Open/shorted K7 circuit.
- Open N5 circuit.
- Open K8 between TPS and engine controller.
- 60-way connector problem.
- Defective TPS.
- Defective engine controller.
- Internal controller failure.

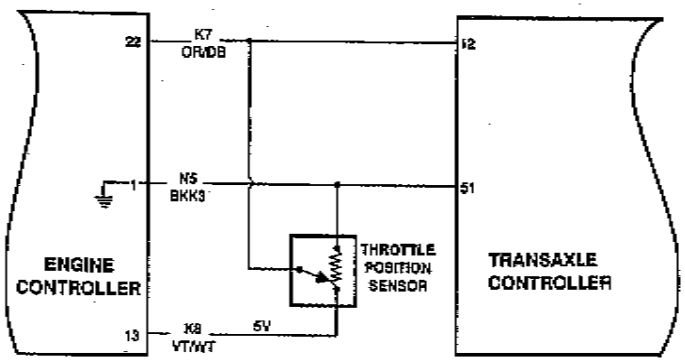

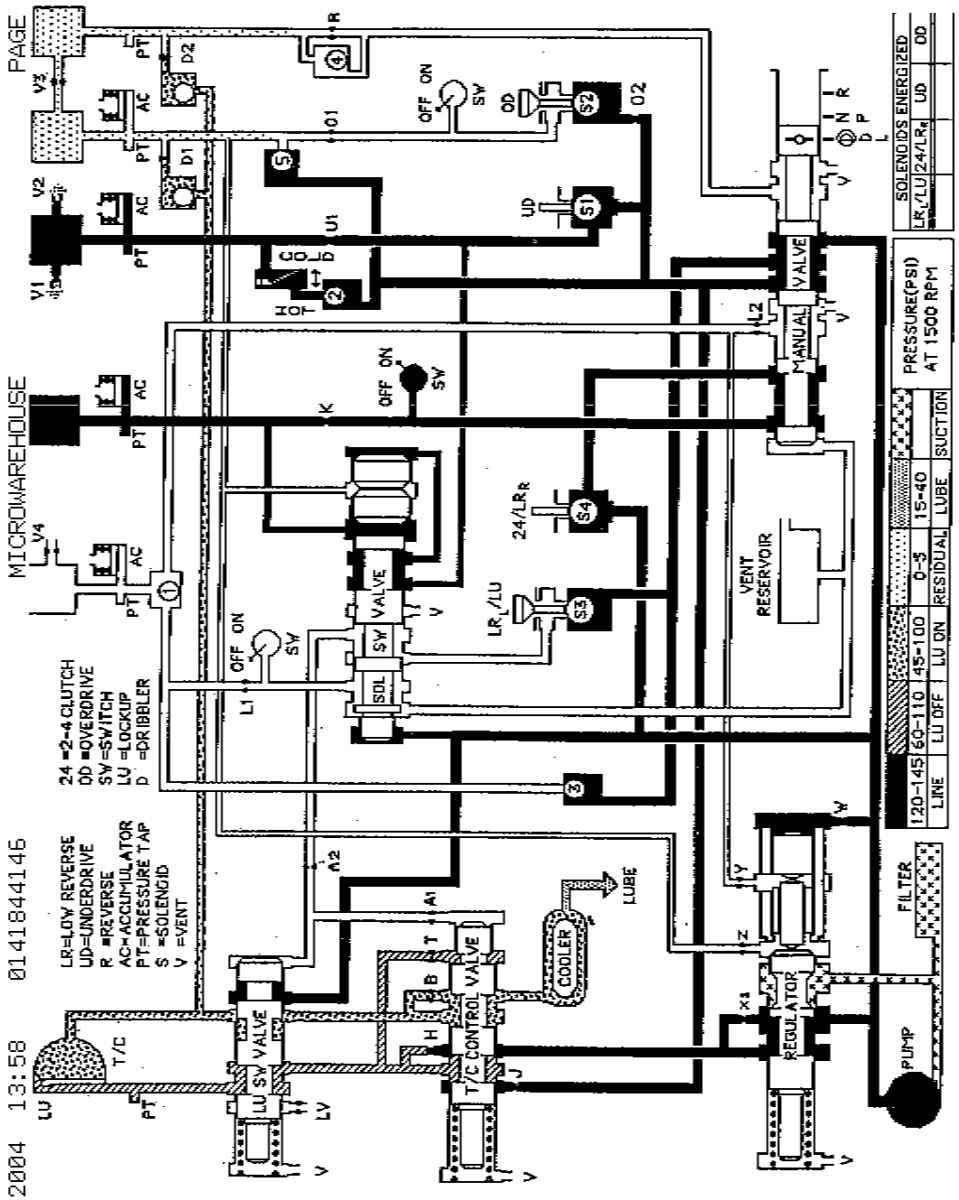






| Code 28: | Check PRNDL Signal |
|---|---|

**Background:** PRNDL and Neutral/Start (N/S) switches are used to:
1. Determine the Shift Lever Position (SLP).
2. Supply a ground to the Starter Relay in Park and Neutral only.
3. Supply a ground to the Backup Lamp Relay in Reverse only.

The controller reads the switch signals (NS1 and RL1 from Neutral/Start switch, NS2 and RL2 from PRNDL switch) according to the table below which includes two recognized temporary codes that occur while moving SLP.

**Normal PRNDL & Neutral/Start Switch States**

| SLP | NS2 | NS1 | RL2 | RL1 |
|---|---|---|---|---|
| P | 1 | 1 | 0 | 0 |
| R | 0 | 0 | 1 | 1 |
| N | 0 | 1 | 1 | 0 |
| OD | 0 | 0 | 0 | 1 |
| D | 0 | 0 | 1 | 0 |
| L | 1 | 0 | 0 | 0 |
| T1 | 1 | 0 | 0 | 0 |
| T2 | 0 | 0 | 0 | 0 |

0 = Switch is open
1 = Switch is closed

When an invalid code is seen, the controller tries to determine SLP through hydraulic interpretation (by energizing some solenoids and monitoring the pressure switch responses).

**Conditions To Set Code:** An invalid SLP code is seen for a few seconds.

**When Checked:** Continuously.

**Effect:** No limp-in. However, valid but incorrect PRNDL and Neutral/Start signals, (eg. shift lever is in OD position where R code is being received), may result in other fault codes and possibly a limp-in.

This is why it is very important to verify the correctness of the SLP signals before diagnosing any problems.

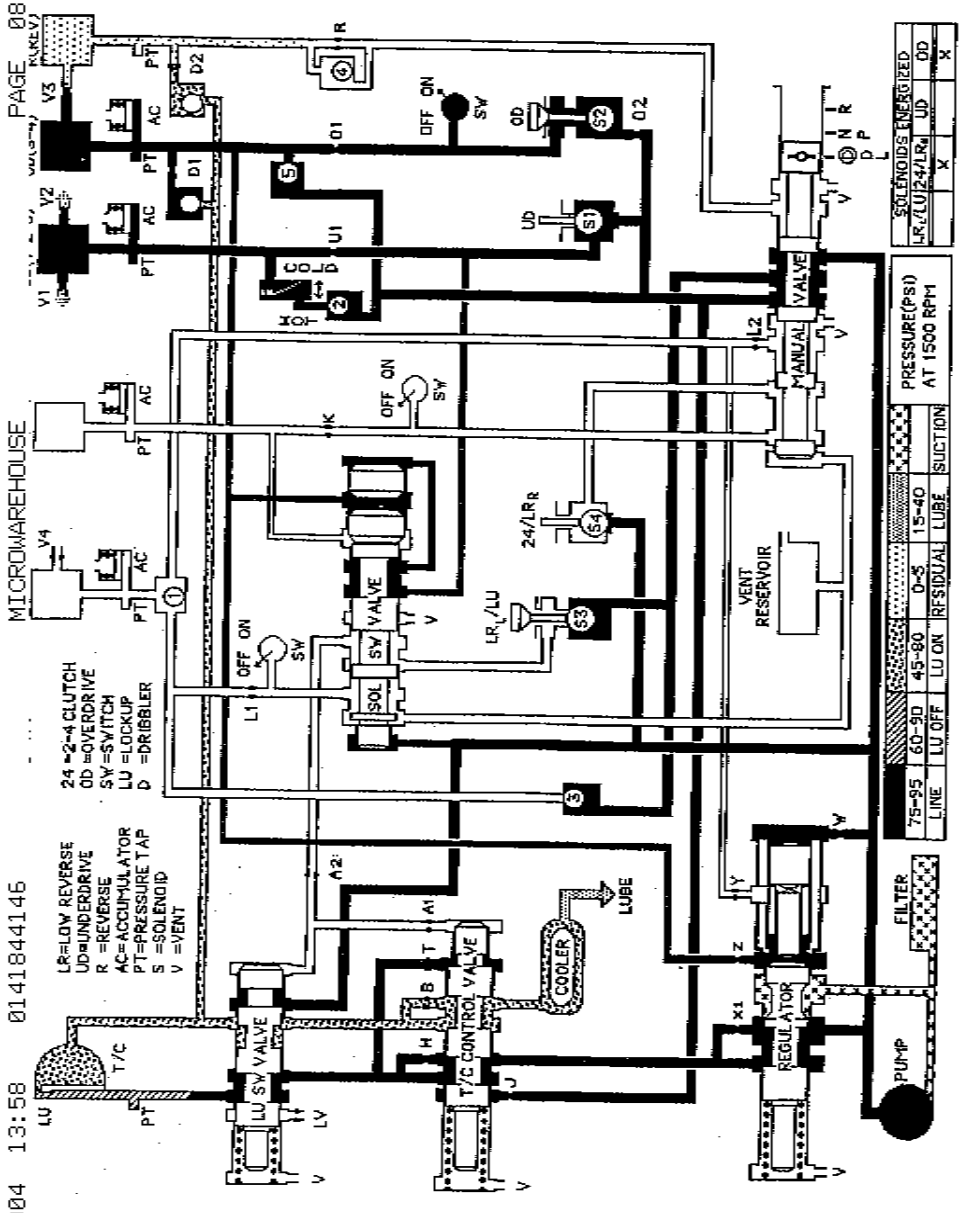








**Code 21 to 27:** **Pressure Switch Circuits**

| | |
|---|---|
| **Code 21** | **OD Pressure Switch Circuit** |
| **Code 22** | **24 Pressure Switch Circuit** |
| **Code 23** | **24 & OD Pressure Switch Circuits** |
| **Code 24** | **LR Pressure Switch Circuit** |
| **Code 25** | **LR & OD Pressure Switch Circuits** |
| **Code 26** | **LR & 24 Pressure Switch Circuits** |
| **Code 27** | **All Pressure Switch Circuits** |

**Background:** The A-604 transaxle system uses three pressure switches to monitor the fluid pressure in the LR, 24, and OD elements. The pressure switches are continuously checked for the correct states in each gear as indicated below:

**Normal Pressure Switch States**

| GEAR | LR | 24 | OD |
|---|---|---|---|
| P | 1 | 0 | 0 |
| R | 0 | 0 | 0 |
| N | 1 | 0 | 0 |
| 1ST | 1 | 0 | 0 |
| 2ND | 0 | 1 | 0 |
| 3RD | 0 | 0 | 1 |
| 4TH | 0 | 1 | 1 |

0 = Switch is open
1 = Switch is closed

When a pressure switch mismatch is detected, the solenoid circuits are tested for continuity. If that test fails, solenoid circuits are blamed for the pressure switches mismatch. Otherwise the appropriate pressure switch code is set.

**Conditions To Set Code:** The pressure switch states are checked when:

- Engine has been running for at least a few seconds.
- Correct transaxle fluid level.
- Transaxle is in gear.
- Pressure switch mismatch.

**When Checked:** Continuously.

**Effect:** Transaxle limp-in (2nd gear).

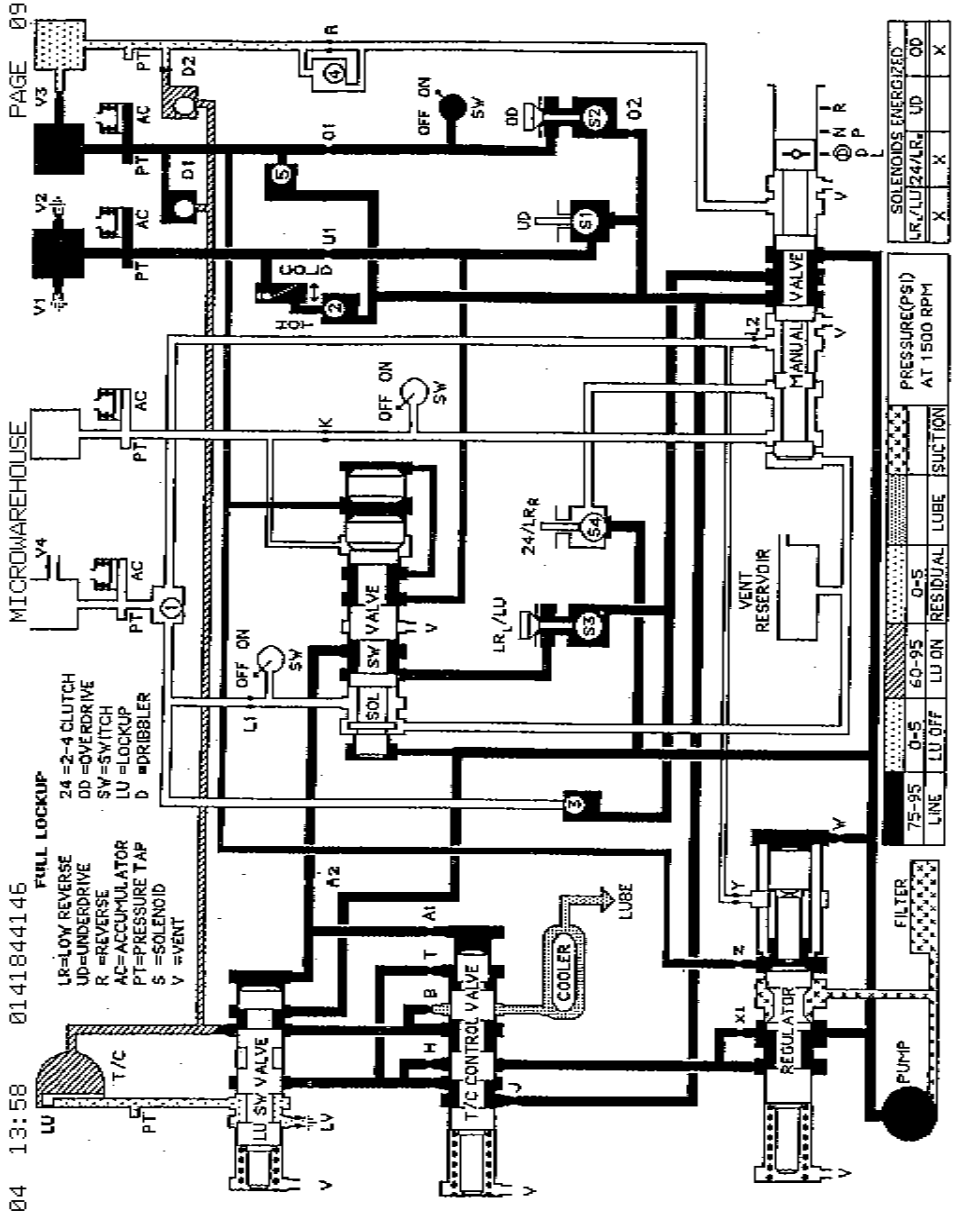








| Code 19: | C²D Bus Communication |
|---|---|

**Background:** EATX communicates with the engine controller over the C²D bus. Engine RPM, Engine and Ambient Temperature are among the information received by EATX. The controller continuously monitors the bus activity and receives the messages it needs.

**Conditions To Set Code:** No activity on the C²D bus.

**When Checked:** Continuously.

**Effect:**
- No limp-in.
- Due to loss of temperature information:
  - a. Delayed 3-4 shift and early 4-3 shift for few minutes after engine is started.
  - b. No lock up operations for a few minutes after engine is started.

**NOTE:** When the C²D bus becomes operational again, EATX will resume receiving the needed messages. However, the code will remain set.

**Probable Causes:**
- Open MX1 or MX2 circuits between EATX and engine controller.
- Shorted MX1 or MX2 circuit.
- C²D bus biasing problem (bus has to be properly biased by one of the vehicle's controllers).
- Engine controller C²D problem circuit.
- EATX controller C²D circuit problem.

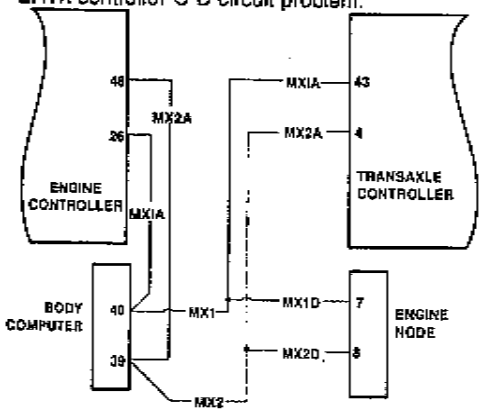


EXAMPLE: C2D BUS CIRCUIT C AND Y BODIES

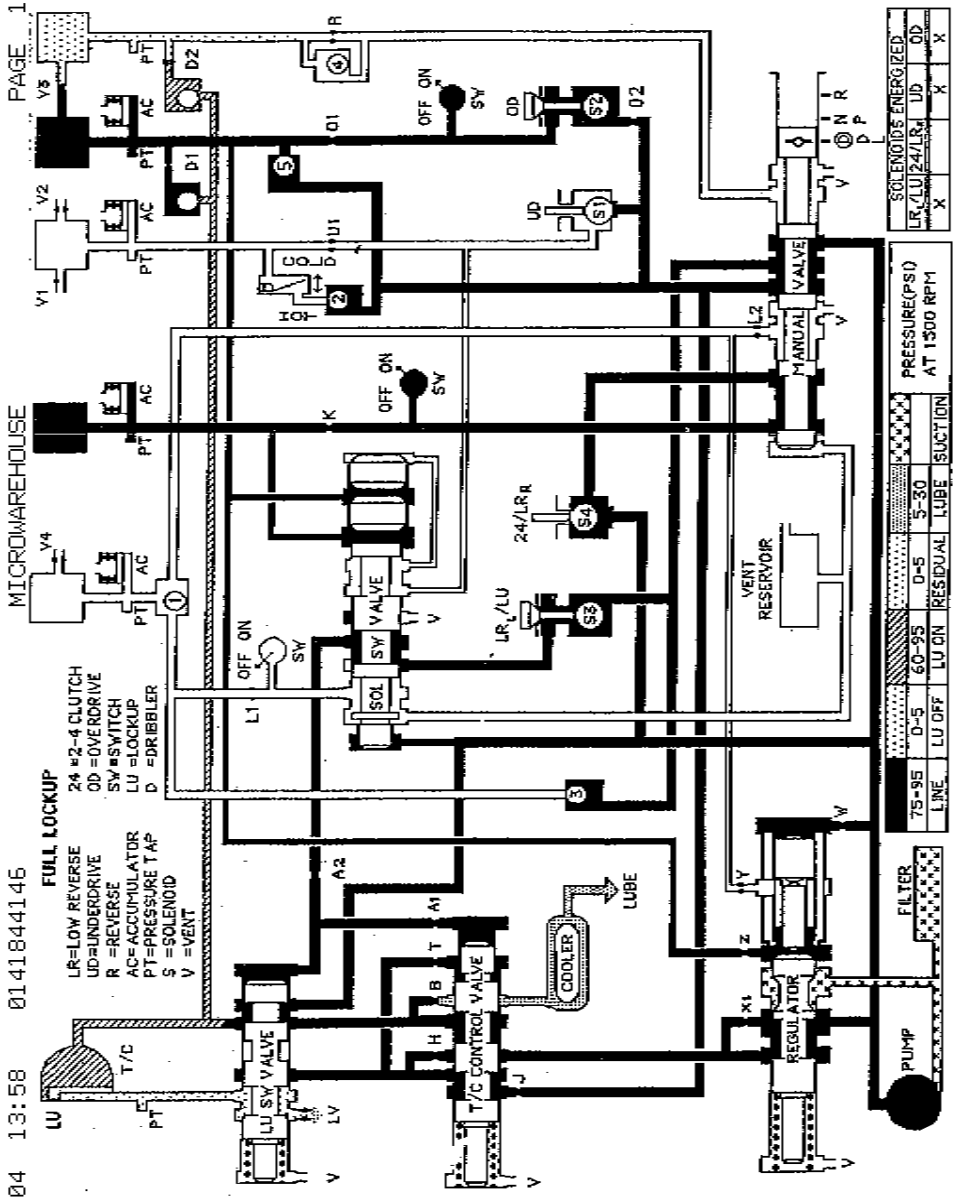








| Code 16: | Internal A-604 Control (ROM Check failure) |
|---|---|

**Background:** When the controller is reset, the CPU checks the integrity of the program memory (ROM). It adds all used bytes in the program memory. The sum should be the same as a known constant (stored in program memory).

**Conditions To Set Code:** ROM checksum does not match a known constant.

**When Checked:** After a reset (ignition key turned to the RUN position or after cranking engine).

**Effect:** Transaxle limp-in (2nd Gear).

**Probable Causes:** Internal controller failure.

| Code 17: | Internal A-604 Controller (RAM Check Failure) |
|---|---|

**Background:** When the controller is reset, the CPU checks the integrity of each RAM location by writing to it and reading back from it. The read value should be the same as value written.

**Conditions To Set Code:** Data read from at least one RAM location does not match data written to it.

**When Checked:** After a reset (ignition key turned to the RUN position or after cranking engine).

**Effect:** Transaxle limp-in (2nd gear).

**Probable Causes:** Internal controller failure.

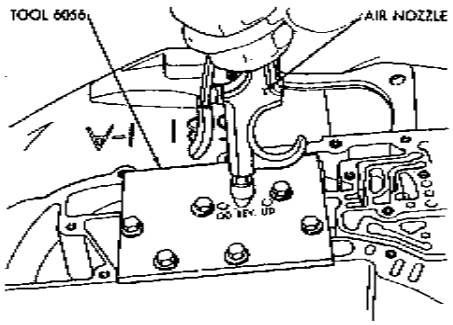


*Fig. 3—Testing Reverse Clutch*

**Reverse Clutch**

Apply air pressure to the reverse clutch apply passage and watch for the push/pull piston to move rearward. The piston should return to its starting position when the air pressure is removed.

**2/4 Clutch**

Apply air pressure to the feed hole located on the 2/4 clutch retainer. Look in the area where the 2/4 piston contacts the first separator plate and watch carefully for the 2/4 piston to move rearward. The piston should return to its original position after the air pressure is removed.

**Low/Reverse Clutch**

Apply air pressure to the low/reverse clutch feed hole (rear of case, between 2 bolt holes). Then, look in the area where the low/reverse piston contacts the first separator plate and watch carefully for the piston to move forward. The piston should return to its original position after the air pressure is removed.

**Underdrive Clutch**

Because this clutch piston can not be seen, its operation is checked by function. Air pressure is applied to the low/reverse and the 2/4 clutches. This locks the output shaft. Use a piece of rubber hose wrapped around the input shaft and a pair of clamp-on pliers to turn the input shaft. Next apply air pressure to the underdrive clutch. The input shaft should not rotate with hand torque. Release the air pressure and confirm that the input shaft will rotate.

## FLUID LEAKAGE—TRANSAXLE TORQUE CONVERTER HOUSING AREA

(1) Check for Source of Leakage.

Since fluid leakage at or around the torque converter area may originate from an engine oil leak, the area should be examined closely. Factory fill fluid is dyed red and, therefore, can be distinguished from engine oil.

(2) Prior to removing the transaxle, perform the following checks:

When leakage is determined to originate from the transaxle, check fluid level prior to removal of the transaxle and torque converter.

High oil level can result in oil leakage out the vent in the manual shaft. If the fluid level is high, adjust to proper level.

After performing this operation, inspect for leakage. If a leak persists, perform the following operation on the vehicle to determine if it is the torque converter or transaxle that is leaking.

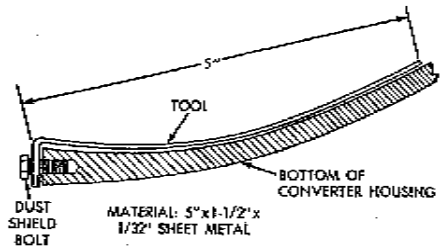


*Fig. 4—Leak Locating Test Probe Tool*

**Leakage Test Probe**

(1) Remove torque converter housing dust shield.

(2) Clean the inside of torque converter housing (lower area) as dry as possible. A solvent spray followed by compressed air drying is preferable.

(3) Fabricate and fasten test probe (Fig. 4) securely to convenient dust shield bolt hole. Make certain torque converter is cleared by test probe. Tool must be clean and dry.

(4) Run engine at approximately 2,500 rpm with transaxle in neutral, for about 2 minutes. Transaxle must be at operating temperature.

(5) Stop engine and carefully remove tool.





| Code 15: | EATX Relay Always Off |
|---|---|

**Background:** The EATX relay is used to supply power to the solenoid pack (when in normal operating mode) and to turn off power (when the transaxle is in "limp-in" mode). The relay output (which supplies power to the solenoid pack) is fed back to the controller through pins 16 and 17. It is referred to as SWITCHED BATTERY.

After a controller reset (ignition key turned to the RUN position or when cranking engine), the controller energizes the relay. Then the controller verifies that the relay contacts are closed by checking for voltage on Switched battery (ie. relay output).

**Conditions To Set Code:** Relay output (Switched Battery) has less than 3 volts when relay is energized by controller.

**When Checked:** After a reset (ignition key turned to the RUN position or after cranking engine).

**Effect:** Transaxle limp-in (2nd gear).

**Probable Causes:**

- Relay failure (Open contacts).
- Short to ground in SA1 circuit.
- Open SA1 circuit between relay and controller.
- Open SF1 circuit between relay and controller.
- Open J91 circuit from relay to ground.
- Open J11 circuit from relay to splice.
- 60-way connector problem (cavities 15, 16, and 17).
- Internal controller failure.

## DIAGNOSIS GUIDE-ABNORMAL NOISE

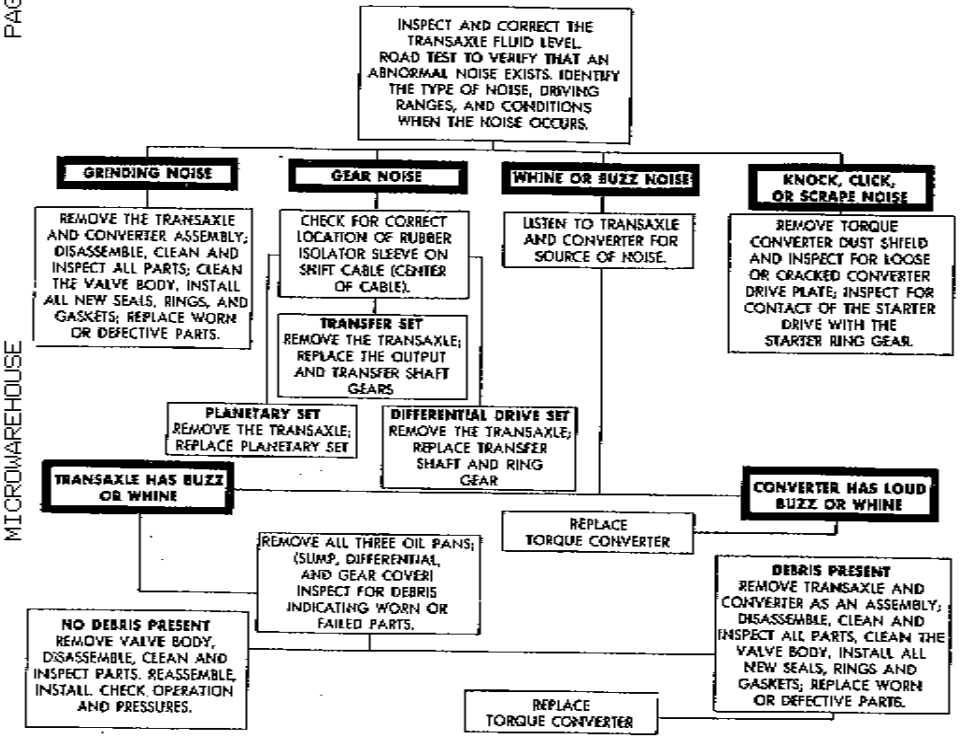






| Code 13: | Internal A-604 Controller (Watchdog Circuit Shutdown) |
|---|---|

**Background:** The internal Watchdog (WD) circuit continuously monitors the CPU. It provides a shutdown function when it detects a problem in the CPU.

**Conditions To Set Code:** A problem with the microprocessor detected by WD.

**When Checked:** After a reset (ignition key turned to the RUN position or after cranking engine), and periodically thereafter.

**Effect:** Transaxle limp-in (2nd gear).

**Probable Causes:** Internal controller failure.

| Code 14: | EATX Relay Always On |
|---|---|

**Background:** The EATX relay is used to supply power to the solenoid pack (when in normal operating mode) and to turn off power (when the transaxle has been placed into the "limp-in" mode of operation). The relay output (which supplies power to the solenoid pack) is fed back to the controller through pins 16 and 17. It is referred to as SWITCHED BATTERY.

After a controller reset (ignition key turned to the RUN position or after cranking engine), the controller energizes the relay. But before this is done, the controller verifies that the relay contacts are open by checking for no voltage on Switched battery (ie. relay output).

**Conditions To Set Code:** Relay output (Switched Battery) has more than 3 volts when relay is not energized by controller.

**When Checked:** After a reset (ignition key turned to the RUN position or after cranking engine), and after a "power-down" from turning ignition off.

**Effect:** Transaxle limp-in (2nd gear).

**Probable Causes:**
- Relay failure (Welded contacts).
- Short to battery in SA1 circuit.
- Short to battery in SF1 circuit.
- 60-way connector problem (cavities 15, 16, and 17).
- Internal controller failure.

## DIAGNOSIS CHART "B"

| POSSIBLE CAUSE / CONDITION | HARSH ENGAGEMENT FROM NEUTRAL TO D, R | DELAYED ENGAGEMENT FROM NEUTRAL TO D, R | POOR SHIFT QUALITY | SHIFTS ERRATIC | DRIVES IN NEUTRAL | DRAGS OR LOCKS | GRATING, SCRAPING, GROWLING NOISE | KNOCKING, NOISE | BUZZING NOISE | BUZZING NOISE DURING SHIFTS ONLY | HARD TO FILL, OIL BLOWS OUT FILLER TUBE | TRANSAXLE OVERHEATS | HARSH UPSHIFT | NO UPSHIFT INTO OVERDRIVE | NO LOCKUP | HARSH DOWNSHIFTS | HIGH SHIFT EFFORTS | HARSH LOCKUP SHIFT |
|---|---|---|---|---|---|---|---|---|---|---|---|---|---|---|---|---|---|---|
| Engine Performance | X | X | | | | X | | | | | | | | X | | | X | |
| Worn or faulty clutch(es) | X | X | X | X | | X | X | X | | | | | | X | X | | X | |
| —Underdrive clutch | X | | X | | | X | X | X | | | | | | | | | X | |
| —Overdrive clutch | | | | | | X | X | X | | | | | | X | X | | | |
| —Reverse clutch | | X | | X | | | X | X | | | | | | | | | | |
| —2/4 clutch | | | | | | X | | X | | | | | | X | | | X | |
| —Low/reverse clutch | X | X | | | | X | | X | | | | | | | | | X | |
| Clutch(es) dragging | | | | | | | X | | | | | | | | | | | |
| Insufficient clutch plate clearance | | | | | | | X | | | | | | X | | | | | |
| Damaged clutch seals | | | X | X | | | | | | | | | | | | | X | |
| Worn or damaged accumulator seal ring(s) | X | X | X | X | | | | | | | | | | | | | X | |
| Faulty cooling system | | | | | | | | | | | | | X | | | | | |
| Engine coolant temp. too low | | | | | | | | | | | | | | | X | X | | |
| Incorrect gearshift control linkage adjustment | | | X | X | | X | X | | | | | | X | | | | | |
| Shift linkage damaged | | | | | | | | | | | | | | | | | | X |
| Chipped or damaged gear teeth | | | | | | | X | X | | | | | | | | | | |
| Planetary gearsets broken or seized | | | | | | | X | X | | | | | | | | | | |
| Bearings worn or damaged | | | | | | | X | X | | | | | | | | | | |
| Driveshaft(s) bushing(s) worn or damaged | | | | | | | | X | | | | | | | | | | |
| Worn or broken reaction shaft support seal rings | | | X | X | X | X | | | | | | | | | | | X | |
| Worn or damaged input shaft seal rings | | | X | X | | | | | | | | | | | | | | |
| Valve body malfunction or leakage | X | X | X | X | X | X | X | | | X | | | | | X | | | |
| Hydraulic pressures too low | | | X | X | X | X | | | | | | | | | X | X | X | |
| Hydraulic pressures too high | X | X | | | | | | | | | | X | X | | X | | | |
| Faulty oil pump | | | X | X | | X | | | | | | | X | | | X | | |
| Oil filter clogged | | | X | X | X | X | | | | | X | | | | | | | |
| Low fluid level | | | X | X | X | X | | | X | | | X | | | | X | | |
| High fluid level | | | | | | | | | | | X | X | | | X | X | | |
| Aerated fluid | | | X | X | X | X | | | X | | X | X | | | X | X | | |
| Engine idle speed too low | | | X | X | | | | | | | | | | | | | | |
| Engine idle speed too high | X | X | | | | | | | | | | X | | | | X | | |
| Normal solenoid operation | | | | | | | | | | X | | | | | | | | |
| Solenoid sound cover loose | | | | | | | | | | X | | | | | | | | |
| Sticking lockup piston | | | | | | | | | | | | | | | | | | X |





# CHRYSLER A604

## DIAGNOSTIC FAULT CODE CHART

| FAULT | CODE | LIMP-IN |
|---|---|---|
| INTERNAL A604 CONTROLLER | 11 | YES |
| BATTERY WAS DISCONNECTED | 12 | NO |
| INTERNAL A604 CONTROLLER | 13 | YES |
| EATX RELAY OUTPUT ALWAYS ON | 14 | YES |
| EATX RELAY OUTPUT ALWAYS OFF | 15 | YES |
| INTERNAL A604 CONTROLLER | 16 | YES |
| INTERNAL A604 CONTROLLER | 17 | YES |
| ENGINE SPEED SIGNAL CIRCUIT | 18 | YES |
| BUS COMUNICATION WITH ENGINE CONTROLLER | 19 | NO |
| SWITCHED BATTERY | 20 | YES |
| OD PRESSURE SWITCH CIRCUIT | 21 | YES |
| 2/4 PRESSURE SWITCH CIRCUIT | 22 | YES |
| 2/4 AND OD PRESSURE SWITCH CIRCUITS | 23 | YES |
| L/R PRESSURE SWITCH CIRCUIT | 24 | YES |
| L/R AND OD PRESSURE SWITCH CIRCUITS | 25 | YES |
| L/R AND 2/4 PRESSURE SWITCH CIRCUITS | 26 | YES |
| ALL PRESSURE SWITCH CIRCUITS | 27 | YES |
| CHECK PRNODL SIGNAL | 28 | NO |
| THROTTLE POSITION SIGNAL | 29 | NO |
| OD HYDRAULIC PRESSURE SWITCH | 31 | YES |
| 2/4 HYDRAULIC PRESSURE SWITCH | 32 | YES |
| OD AND 2/4 HYDRAULIC PRESSURE SWITCH | 33 | YES |
| FAULT IMMEDIATELY AFTER SHIFT | 36 | YES |
| SOLENOID SWITCH VALVE (STUCK IN LU POSITION) | 37 | NO |
| LOCKUP CONTROL | 38 | NO |
| GEAR RATIO ERROR | 39 | YES |
| L/R SOLENOID CIRCUIT ERROR | 41 | YES |
| 2/4 SOLENOID CIRCUIT ERROR | 42 | YES |
| OD SOLENOID CIRCUIT ERROR | 43 | YES |
| UD SOLENOID CIRCUIT ERROR | 44 | YES |
| INTERNAL A604 CONTROLLER | 45 | NO |
| 3-4 SHIFT ABORT | 46 | NO |
| SOLENOID SWITCH VALVE (STUCK IN L/R POSITION) | 47* | YES |
| GEAR RATIO ERROR IN REVERSE | 50* | YES |
| GEAR RATIO ERROR IN 1ST | 51* | YES |
| GEAR RATIO ERROR IN 2ND | 52* | YES |
| GEAR RATIO ERROR IN 3RD | 53* | YES |
| GEAR RATIO ERROR IN 4TH | 54* | YES |
| TURBINE SENSOR ERROR | 56* | YES |
| OUTPUT SENSOR ERROR | 57* | YES |
| SENSORS GROUND ERROR | 58* | YES |
| INADEQUATE L/R ELEMENT VOLUME | 60* | NO |
| INADEQUATE 2/4 ELEMENT VOLUME | 61* | NO |
| INADEQUATE OD ELEMENT VOLUME | 62* | NO |
| INADEQUATE UD ELEMENT VOLUME | 63* | NO |

*DENOTES NEW FOR 1991

new grommet into lever and rod into grommet.

**CAUTION: Set parking brake.**

(1) Place gearshift lever in "P" (PARK) position.

(2) Loosen clamp bolt on gearshift cable bracket.

(3) Column shift: Insure that preload adjustment spring engages fork on transaxle bracket.

(4) Pull the shift lever by hand all the way to the front detent position (PARK) and tighten lock screw to 11 N·m (100 in. lbs.). Gearshift linkage should now be properly adjusted.

(5) Check adjustment as follows:

(a) Detent position for neutral and drive should be within limits of hand lever gate stops.

(b) Key start must occur only when shift lever is in park or neutral positions.

(6) To remove button assembly, completely remove knob attaching fasteners. Pull knob "up" sharply. Proceed as outlined in console removal, "Group 23."

After console is back in place, install knob and button by reversing the above procedure.

## SERVICE IN VEHICLE

### GENERAL INFORMATION

Various transaxle components can be removed for repairs without removing the transaxle from the vehicle. The removal, reconditioning, and installation procedures for some of these components are covered here.

**The valve body (see service out of vehicle) may be serviced in the vehicle, as can the parking sprag, solenoid assembly, PRNDL Switch, Neutral/Safety switch, and extension housing oil seal.**

### SPEEDOMETER PINION GEAR

**When the speedometer pinion adapter is removed for any reason, a NEW O-ring must be installed on the outside diameter of the adapter.**

***Remove and Install***

(1) Remove bolt and washer assembly securing speedometer pinion adapter in the extension housing.

(2) With cable housing connected, carefully work adapter and pinion out of the extension housing.

(3) Remove the retainer and remove the pinion from the adapter.

(4) If transmission fluid is found in cable housing, install a new speedometer pinion and seal assembly.

(5) If transmission fluid is found leaking between the cable and adapter, replace the small O-ring on the cable. Remove the adapter from the cable. Replace the O-ring.

(6) Install the adapter on the cable.

(7) Install the pinion on adapter with a new large O-ring and install retainer on pinion and adapter. Be sure the retainer is properly seated.

Before installing pinion, adapter, and cable assembly make sure adapter flange and its mating areas on extension housing are clean. Dirt or sand will cause misalignment resulting in speedometer pinion gear damage.

(8) Install bolt and washer. Tighten retainer bolt to 7 N·m (60 in. lbs.).

### ALUMINUM THREAD REPAIR

Damaged or worn threads in the aluminum transaxle case and valve body can be repaired by the use of Heli-Coils, or equivalent. Essentially, this repair consists of drilling out the worn-out damaged threads, tapping the hole with a special Heli-Coil tap, or equivalent, and installing a Heli-Coil insert, or equivalent, into the tapped hole. This brings the hole back to its original thread size.

Heli-Coil, or equivalent, tools and inserts are readily available from most automotive parts suppliers.







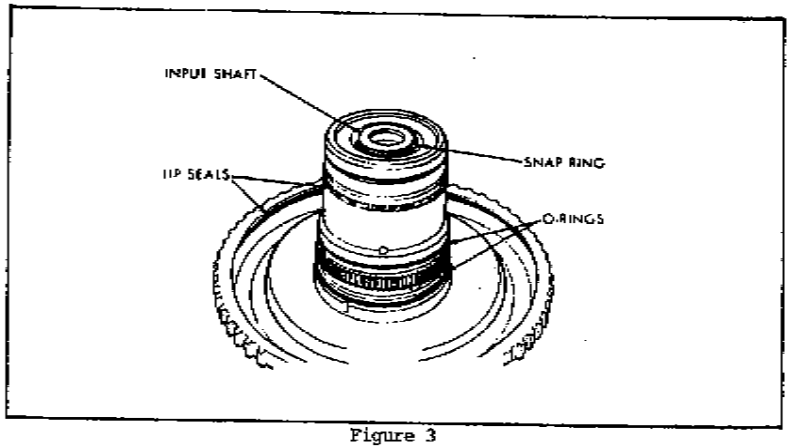


Figure 3

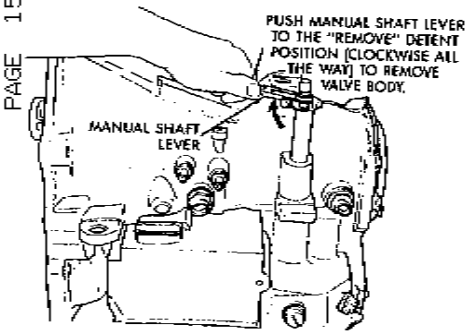


*Fig. 4—Position Manual Valve*

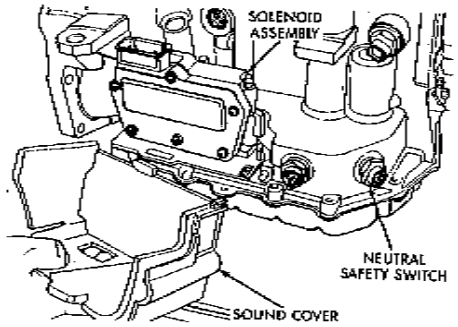


*Fig. 3—Sound Cover*

**OLENOID ASSEMBLY-REPLACE**

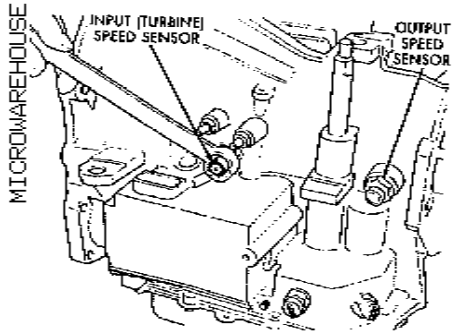


*Fig. 1—Input Speed Sensor*

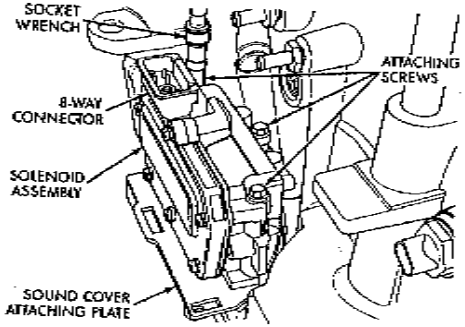


*Fig. 4—Attaching Screws*

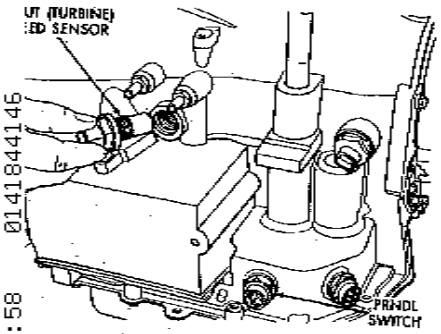


*Fig. 2—Input Speed Sensor—Removed*

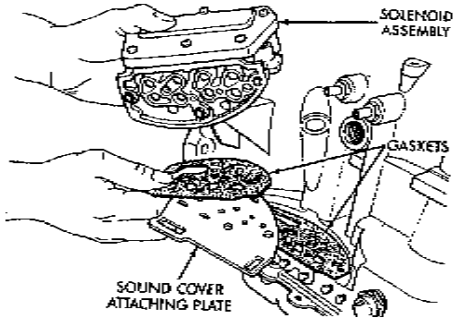


*Fig. 5—Solenoid Assembly*







# TORQUEFLITE A604 UPDATED REPAIR PACKAGE

This bulletin applies to all Dynasty, New Yorker, Landau, Ram Van, Caravan, and Voyager vehicles.

There is now available from OEM a new repair package, part number 4549248, that includes a new 4 ring front pump reaction shaft (See Figure 1), and a new input clutch hub with shallower "O" ring grooves to increase the compression of the "O" rings (See Figure 3). The new 4 ring front pump reaction shaft (Figure 1) provides better sealing for the overdrive clutch, and the new input clutch hub with shallower "O" ring grooves (Figure 3) provides better sealing for both the underdrive clutch and the reverse clutch. Both of these updated parts are highly recommended to provide better durability for the A604 transaxle.

There has also been a modification to the input clutch retainer as shown in Figure 2. The "Lip" can be machined off of the old style input clutch retainer, or it must be replaced with part number 4431609. Refer to Figure 2.

The new repair package also includes a new valve body spacer plate. Remove and "Discard" the old spacer plate, as the new spacer plate has a larger overdrive clutch feed orifice to provide increased oil flow to the overdrive clutch circuit.

If the transmission controller part number is 5234623, or 5234649, replace it with part number 5234678 (Or Subsequent) transmission controller.

During reassembly of the transaxle, select a washer to set input shaft end play to the "Preferred" setting of .005" - .015". The end play specification is actually .005" - .025" and is acceptable if the "Preferred" setting cannot be obtained.

SERVICE INFORMATION

| | |
|---|---|
| New Repair Package | 4549248 |
| Gasket Package | 4504558 |
| Input Clutch Retainer (As Required) | 4431609 |
| Transmission Controller (As Required) | 5234678 |

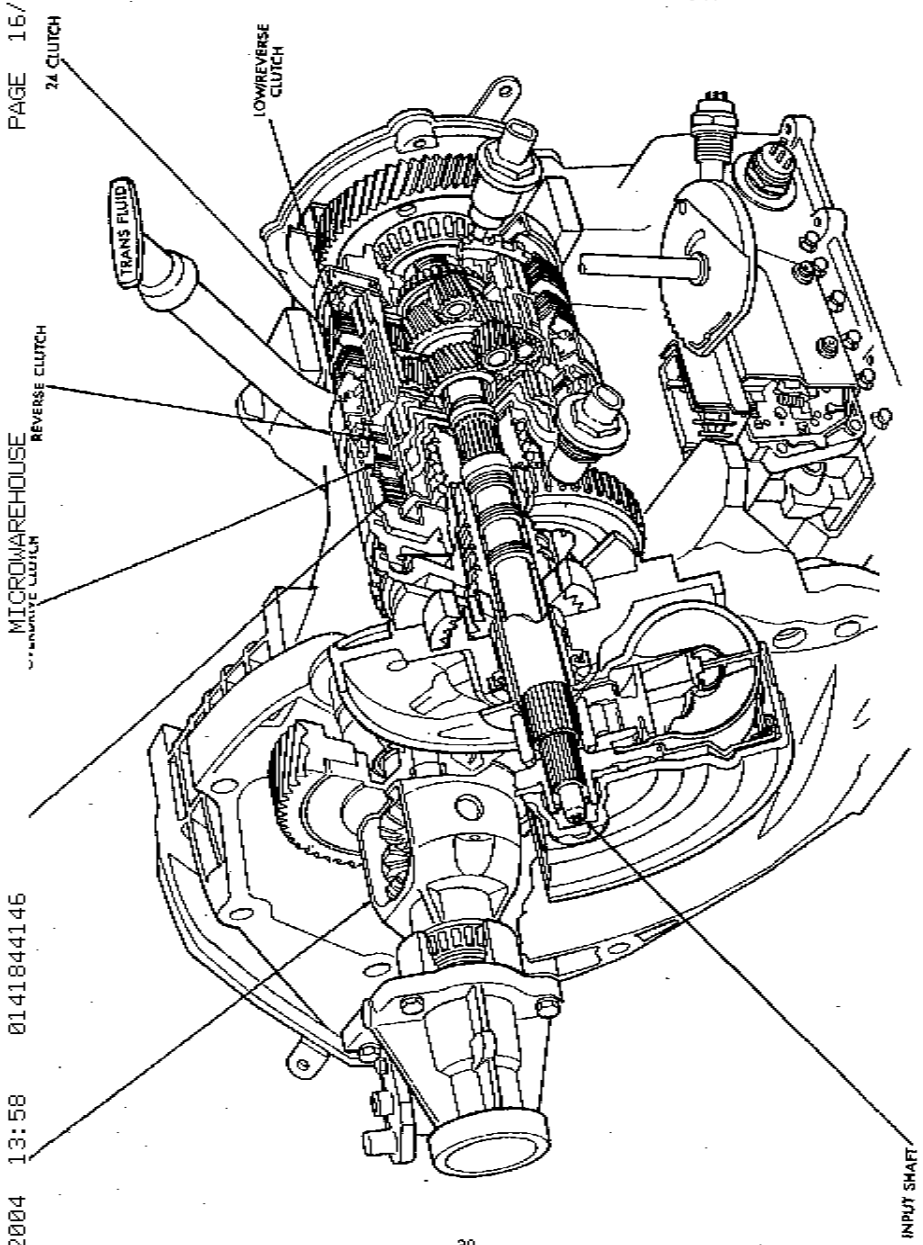
2/4 CLUTCH
LOW/REVERSE CLUTCH
TRANS FLUID
REVERSE CLUTCH
INPUT SHAFT





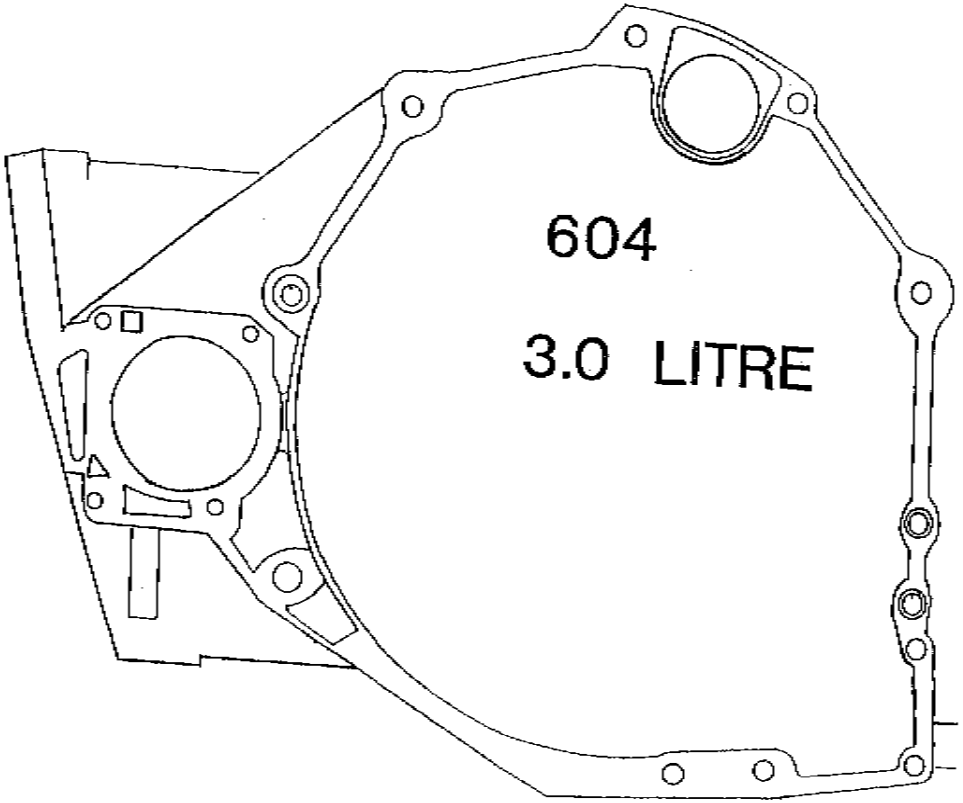
604
3.0 LITRE

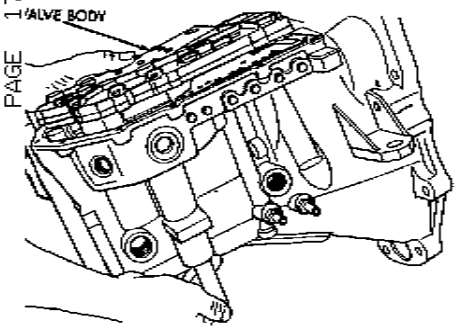


Fig. 6—Remove or Install Valve Body

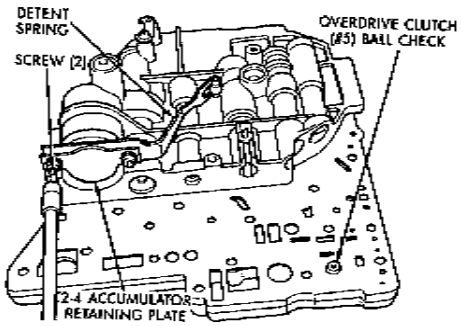


Fig. 9—Retaining Plate Screw

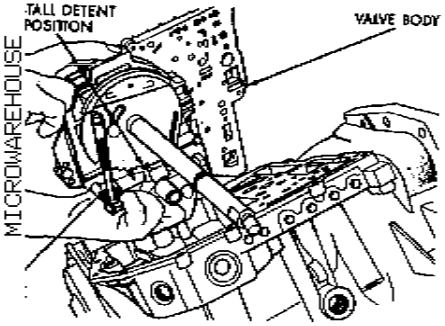


Fig. 7—Valve Body Removed

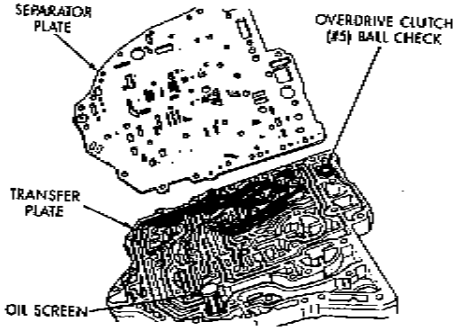


Fig. 10—Transfer Plate and Separator Plate

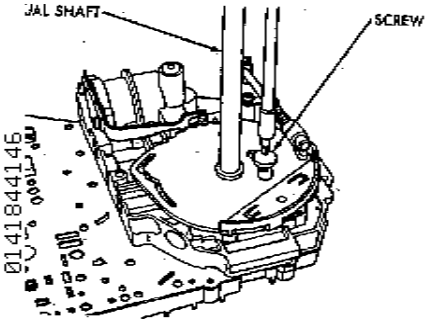


Fig. 8—Manual Shaft Screw

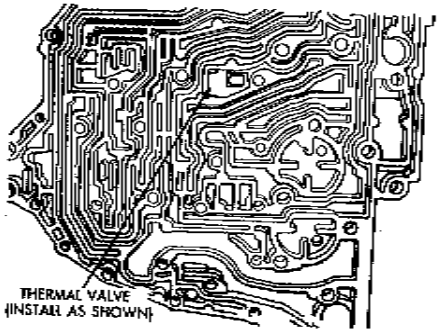


Fig. 11—Transfer Plate





## TIGHTENING REFERENCE

| Item | Thread Size | Torque Newton-meters | Torque Inch-Pounds | Torque Foot-Pounds |
|---|---|---|---|---|
| **A604 Electronic Automatic Transaxle:** | | | | |
| Cooler Line Fittings | 1/8 × 27 NPT | 12 | 110 | — |
| Differential Cover | M8 × 1.25 | 19 | 165 | — |
| Differential Ring Gear | M10 × 1.0 × 25 | 95 | — | 70 |
| Differential Bearing Retainer | M8 × 1.25 × 23 | 28 | — | 21 |
| Rear End Cover | M8 × 1.25 | 19 | — | 14 |
| Extension Housing | M8 × 1.25 × 33 | 28 | — | 21 |
| Input Speed Sensor | M22 × 1.5 | 27 | — | 20 |
| L/R Clutch Retainer | M5 × 0.8 | 5 | 40 | — |
| Neutral Safety Switch | 3/4 IN. × 16 | 34 | — | 25 |
| Oil Pan to Case | M8 × 1.25 | 19 | — | 14 |
| Output Gear Bolt (1.5 inch hex) | M18 × 1.75 | 271 | — | 200 |
| Output Speed Sensor | M24 × 2 | 27 | — | 20 |
| Pressure Taps | 1/16 – 27 NPTF | 5 | 45 | — |
| PRNDL Switch | M22 × 2.5 | 34 | — | 25 |
| Pump to Case | M8 × 1.25 | 22 | — | 23 |
| Reaction Shaft to Pump | M8 × 1.25 | 22 | — | 23 |
| Solenoid Assy. to Case | M6 × 1.0 × 93.5 | 12 | 105 | — |
| Transfer Plate to Case | M6 × 1.0 | 12 | 105 | — |
| Transfer Gear Nut (1.25 inch hex) | M22 × 1.5 | 271 | — | 200 |
| Valve Body & Transfer Plate | M5 × 0.8 | 5 | 40 | — |
| Vent Assembly | 1/8 PIPE | 12 | 110 | — |
| 8-Way Solenoid Connector | M6 × 1.0 | 4 | 38 | — |
| 60-Way EATX Connector | M6 × 1.0 | 4 | 38 | — |

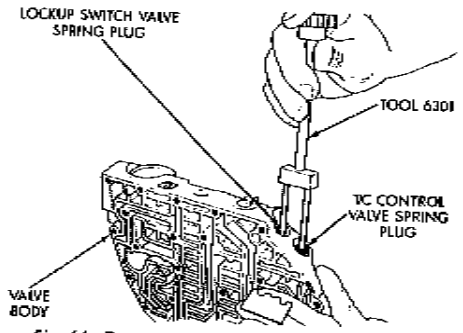


*Fig. 14—Remove or Install Dual Retainer Plate*

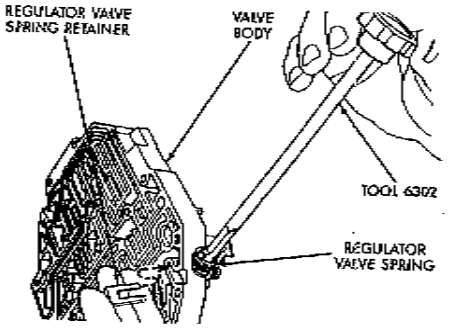


*Fig. 15—Remove or Install Retainer Plate*

When installing valve body assembly onto transaxle, observe Figure 5 and guide park rod rollers into guide bracket, while shifting manual lever assembly out of the installation position.

## ACCUMULATORS

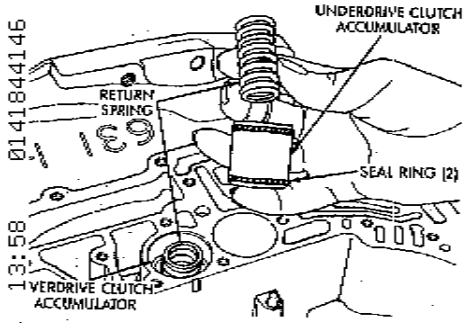


*Fig. 1—Accumulators*

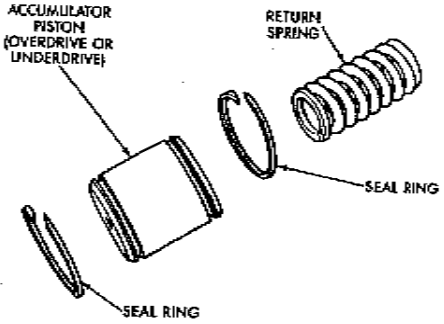


*Fig. 2—Accumulator*

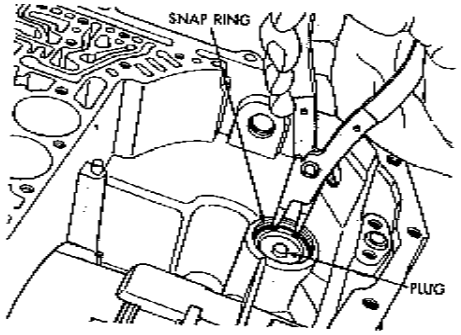


*Fig. 3—Low/Reverse Accumulator Snap Ring*

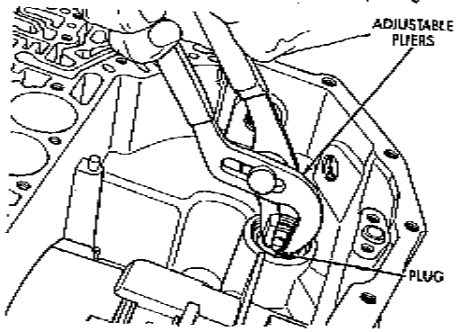


*Fig. 4—Low/Reverse Accumulator Plug*





## SPECIFICATIONS
## A-604 4-SPEED AUTOMATIC TRANSAXLE

| | | |
|---|---|---|
| **Type** | | Fully-adaptive, electronically-controlled, four-speed automatic with torque converter and integral differential |
| **Torque Converter Diameter** | | 241 millimeters (9.48 inches) |
| **Oil Capacity—Transaxle and Torque Converter** | | 8.6 Liters (18.25 pints) |
| **Oil Type** | | MOPAR ATF Type 7176 (or DEXRON III) |
| **Cooling Method** | | Water heat exchanger and/or air-to-oil heat exchanger |
| **Lubrication** | | Pump (internal-external gear type) |
| **Gear Ratios:** | | |
| **Transmission portion:** | | |
| First | | 2.84 |
| Second | | 1.57 |
| Direct | | 1.00 |
| Overdrive | | .69 |
| Reverse | | 2.21 |
| **Overall Top Gear Ratio:** (in overdrive) | | 2.36 |
| **Pump Clearances:** | | (same as A-413 automatic transaxle) |
| **Tapered Roller Bearing Settings:** | (Millimeter) | (Inch) |
| Output Gear | .02-.05 Preload | .0008-.002 Preload |
| Transfer Shaft | .05-.10 End Play | .002-.004 End play |
| Differential | .15-.29 Preload | .006-.012 Preload |

## SPEEDOMETER PINIONS (MANUAL and AUTOMATIC)

The chart below applies to all front-wheel-drive vehicles equipped with Manual or Automatic Transaxles.

| Tire Size and Construction | Pinion Teeth and Color |
|---|---|
| P185 75 R14 | 19 Yellow |
| P195 75 R14 | 19 Yellow |
| P205 70 R14 | 19 Yellow |
| P205 60 R15 | 19 Yellow |
| P195 70 R14 | 19 Yellow |
| All other original equipment tires | 20 Blue |

## A-525/A-520/A-555 MANUAL TRANSAXLE FLUID FILL

Fill All Manual Transaxles with SAE 5W-30 Engine oil to bottom of fill hole in end cover:

| Transaxle | Metric Measure | U.S. Measure |
|---|---|---|
| A-525 | 2.1 Liters | 2.3 Quarts |
| A-520/A-555 | 2.3 Liters | 2.5 Quarts |

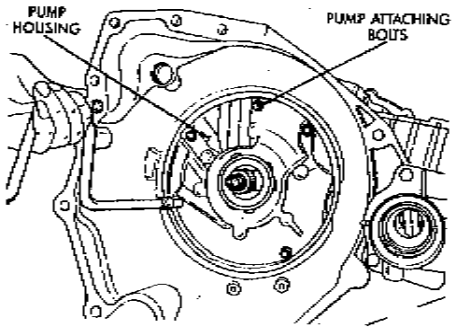


*Fig. 2—Pump Attaching Bolts*

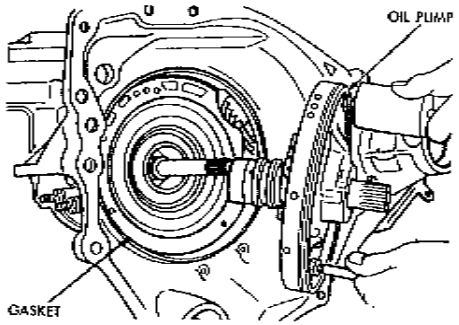


*Fig. 5—Oil Pump Removed*

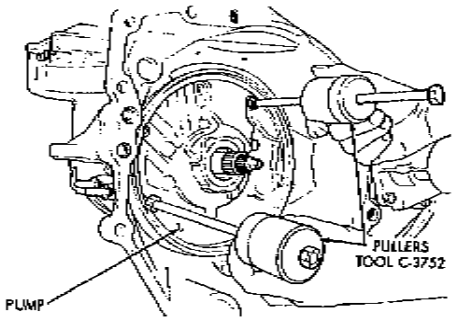


*Fig. 3—Install Tool C-3752*

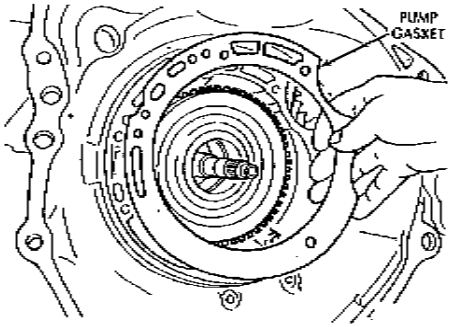


*Fig. 6—Oil Pump Gasket*

**CAUTION:** Be sure input speed sensor is removed before removing oil pump.

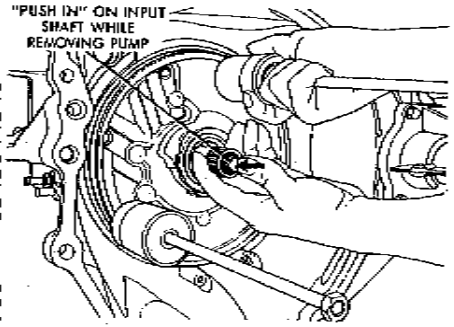


*Fig. 4—Remove Oil Pump*

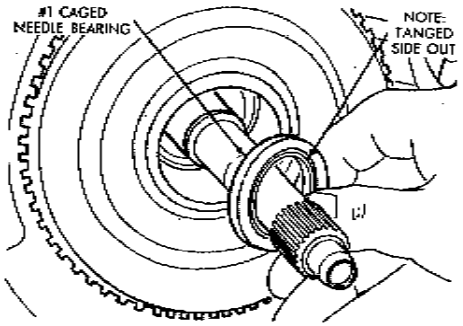


*Fig. 7—#1 Caged Needle Bearing*





**INCHES TO MILLIMETERS**

All values in this table are exact

| inches | 0.000 | 0.001 | 0.002 | 0.003 | 0.004 | 0.005 | 0.006 | 0.007 | 0.008 | 0.009 |
|---|---|---|---|---|---|---|---|---|---|---|
| | millimeters | | | | | | | | | |
| 0.000 | — | 0.0254 | 0.0508 | 0.0762 | 0.1016 | 0.1270 | 0.1524 | 0.1778 | 0.2032 | 0.2286 |
| 0.010 | 0.2540 | 0.2794 | 0.3048 | 0.3302 | 0.3556 | 0.3810 | 0.4064 | 0.4318 | 0.4572 | 0.4826 |
| 0.020 | 0.5080 | 0.5334 | 0.5588 | 0.5842 | 0.6096 | 0.6350 | 0.6604 | 0.6858 | 0.7112 | 0.7366 |
| 0.030 | 0.7620 | 0.7874 | 0.8128 | 0.8382 | 0.8636 | 0.8890 | 0.9144 | 0.9398 | 0.9652 | 0.9906 |
| 0.040 | 1.0160 | 1.0414 | 1.0668 | 1.0922 | 1.1176 | 1.1430 | 1.1684 | 1.1938 | 1.2192 | 1.2446 |
| 0.050 | 1.2700 | 1.2954 | 1.3208 | 1.3462 | 1.3716 | 1.3970 | 1.4224 | 1.4478 | 1.4732 | 1.4986 |
| 0.060 | 1.5240 | 1.5494 | 1.5748 | 1.6002 | 1.6256 | 1.6510 | 1.6764 | 1.7018 | 1.7272 | 1.7526 |
| 0.070 | 1.7780 | 1.8034 | 1.8288 | 1.8542 | 1.8796 | 1.9050 | 1.9304 | 1.9558 | 1.9812 | 2.0066 |
| 0.080 | 2.0320 | 2.0574 | 2.0828 | 2.1082 | 2.1336 | 2.1590 | 2.1844 | 2.2098 | 2.2352 | 2.2606 |
| 0.090 | 2.2860 | 2.3114 | 2.3368 | 2.3622 | 2.3876 | 2.4130 | 2.4384 | 2.4638 | 2.4892 | 2.5146 |
| 0.100 | 2.5400 | 2.5654 | 2.5908 | 2.6162 | 2.6416 | 2.6670 | 2.6924 | 2.7178 | 2.7432 | 2.7686 |
| 0.110 | 2.7940 | 2.8194 | 2.8448 | 2.8702 | 2.8956 | 2.9210 | 2.9464 | 2.9718 | 2.9972 | 3.0226 |
| 0.120 | 3.0480 | 3.0734 | 3.0988 | 3.1242 | 3.1496 | 3.1750 | 3.2004 | 3.2258 | 3.2512 | 3.2766 |
| 0.130 | 3.3020 | 3.3274 | 3.3528 | 3.3782 | 3.4036 | 3.4290 | 3.4544 | 3.4798 | 3.5052 | 3.5306 |
| 0.140 | 3.5560 | 3.5814 | 3.6068 | 3.6322 | 3.6576 | 3.6830 | 3.7084 | 3.7338 | 3.7592 | 3.7846 |
| 0.150 | 3.8100 | 3.8354 | 3.8608 | 3.8862 | 3.9116 | 3.9370 | 3.9624 | 3.9878 | 4.0132 | 4.0386 |
| 0.160 | 4.0640 | 4.0894 | 4.1148 | 4.1402 | 4.1656 | 4.1910 | 4.2164 | 4.2418 | 4.2672 | 4.2926 |
| 0.170 | 4.3180 | 4.3434 | 4.3688 | 4.3942 | 4.4196 | 4.4450 | 4.4704 | 4.4958 | 4.5212 | 4.5466 |
| 0.180 | 4.5720 | 4.5974 | 4.6228 | 4.6482 | 4.6736 | 4.6990 | 4.7244 | 4.7498 | 4.7752 | 4.8006 |
| 0.190 | 4.8260 | 4.8514 | 4.8768 | 4.9022 | 4.9276 | 4.9530 | 4.9784 | 5.0038 | 5.0292 | 5.0546 |
| 0.200 | 5.0800 | 5.1054 | 5.1308 | 5.1562 | 5.1816 | 5.2070 | 5.2324 | 5.2578 | 5.2832 | 5.3086 |
| 0.210 | 5.3340 | 5.3594 | 5.3848 | 5.4102 | 5.4356 | 5.4610 | 5.4864 | 5.5118 | 5.5372 | 5.5626 |
| 0.220 | 5.5880 | 5.6134 | 5.6388 | 5.6642 | 5.6896 | 5.7150 | 5.7404 | 5.7658 | 5.7912 | 5.8166 |
| 0.230 | 5.8420 | 5.8674 | 5.8928 | 5.9182 | 5.9436 | 5.9690 | 5.9944 | 6.0198 | 6.0452 | 6.0706 |
| 0.240 | 6.0960 | 6.1214 | 6.1468 | 6.1722 | 6.1976 | 6.2230 | 6.2484 | 6.2738 | 6.2992 | 6.3246 |
| 0.250 | 6.3500 | 6.3754 | 6.4008 | 6.4262 | 6.4516 | 6.4770 | 6.5024 | 6.5278 | 6.5532 | 6.5786 |
| 0.260 | 6.6040 | 6.6294 | 6.6548 | 6.6802 | 6.7056 | 6.7310 | 6.7564 | 6.7818 | 6.8072 | 6.8326 |
| 0.270 | 6.8580 | 6.8834 | 6.9088 | 6.9342 | 6.9596 | 6.9850 | 7.0104 | 7.0358 | 7.0612 | 7.0866 |
| 0.280 | 7.1120 | 7.1374 | 7.1628 | 7.1882 | 7.2136 | 7.2390 | 7.2644 | 7.2989 | 7.3152 | 7.3406 |
| 0.290 | 7.3660 | 7.3914 | 7.4168 | 7.4422 | 7.4676 | 7.4930 | 7.5184 | 7.5438 | 7.5692 | 7.5946 |
| 0.300 | 7.6200 | 7.6454 | 7.6708 | 7.6962 | 7.7216 | 7.7470 | 7.7724 | 7.7978 | 7.8232 | 7.8486 |
| 0.310 | 7.8740 | 7.8994 | 7.9248 | 7.9502 | 7.9756 | 8.0010 | 8.0264 | 8.0518 | 8.0772 | 8.1026 |
| 0.320 | 8.1280 | 8.1534 | 8.1788 | 8.2042 | 8.2296 | 8.2550 | 8.2804 | 8.3058 | 8.3312 | 8.3566 |
| 0.330 | 8.3820 | 8.4074 | 8.4328 | 8.4582 | 8.4836 | 8.5090 | 8.5344 | 8.5598 | 8.5852 | 8.6106 |
| 0.340 | 8.6360 | 8.6614 | 8.6868 | 8.7122 | 8.7376 | 8.7630 | 8.7884 | 8.8138 | 8.8392 | 8.8646 |
| 0.350 | 8.8900 | 8.9154 | 8.9408 | 8.9662 | 8.9916 | 9.0170 | 9.0424 | 9.0678 | 9.0932 | 9.1186 |
| 0.360 | 9.1440 | 9.1694 | 9.1948 | 9.2202 | 9.2456 | 9.2710 | 9.2964 | 9.3218 | 9.3472 | 9.3726 |
| 0.370 | 9.3980 | 9.4234 | 9.4488 | 9.4742 | 9.4996 | 9.5250 | 9.5504 | 9.5758 | 9.6012 | 9.6266 |
| 0.380 | 9.6520 | 9.6774 | 9.7028 | 9.7282 | 9.7536 | 9.7790 | 9.8044 | 9.8298 | 9.8552 | 9.8806 |
| 0.390 | 9.9060 | 9.9314 | 9.9568 | 9.9822 | 10.0076 | 10.0330 | 10.0584 | 10.0838 | 10.1092 | 10.1346 |
| 0.400 | 10.1600 | 10.1854 | 10.2108 | 10.2362 | 10.2616 | 10.2870 | 10.3124 | 10.3378 | 10.3632 | 10.3886 |
| 0.410 | 10.4140 | 10.4394 | 10.4648 | 10.4902 | 10.5156 | 10.5410 | 10.5664 | 10.5918 | 10.6172 | 10.6426 |
| 0.420 | 10.6680 | 10.6934 | 10.7188 | 10.7442 | 10.7696 | 10.7950 | 10.8204 | 10.8458 | 10.8712 | 10.8966 |
| 0.430 | 10.9220 | 10.9474 | 10.9728 | 10.9982 | 11.0236 | 11.0490 | 11.0744 | 11.0998 | 11.1252 | 11.1506 |
| 0.440 | 11.1760 | 11.2014 | 11.2268 | 11.2522 | 11.2776 | 11.3030 | 11.3284 | 11.3538 | 11.3792 | 11.4046 |
| 0.450 | 11.4300 | 11.4554 | 11.4808 | 11.5062 | 11.5316 | 11.5570 | 11.5824 | 11.6078 | 11.6332 | 11.6586 |
| 0.460 | 11.6840 | 11.7094 | 11.7348 | 11.7602 | 11.7856 | 11.8110 | 11.8364 | 11.8618 | 11.8872 | 11.9126 |
| 0.470 | 11.9380 | 11.9634 | 11.9888 | 12.0142 | 12.0396 | 12.0650 | 12.0904 | 12.1158 | 12.1412 | 12.1666 |
| 0.480 | 12.1920 | 12.2174 | 12.2428 | 12.2682 | 12.2936 | 12.3190 | 12.3444 | 12.3698 | 12.3952 | 12.4206 |
| 0.490 | 12.4460 | 12.4714 | 12.4968 | 12.5222 | 12.5476 | 12.5730 | 12.5984 | 12.6238 | 12.6492 | 12.6746 |
| inches | 0.000 | 0.001 | 0.002 | 0.003 | 0.004 | 0.005 | 0.006 | 0.007 | 0.008 | 0.009 |

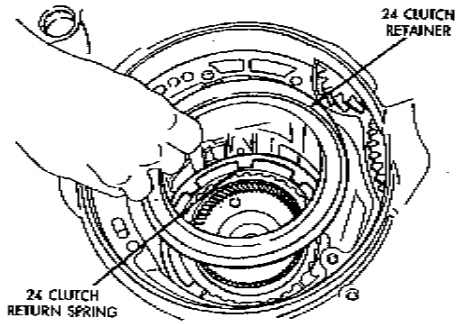


*Fig. 14—2/4 Clutch Retainer*

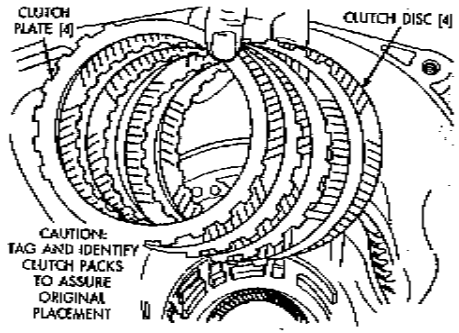


*Fig. 17—2/4 Clutch Pack*

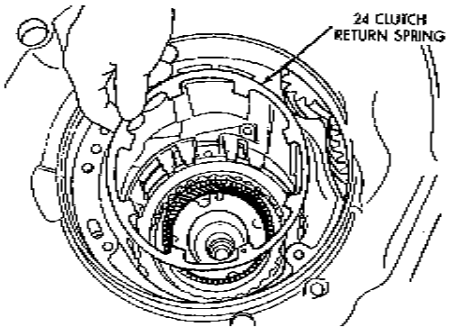


*Fig. 15—2/4 Clutch Return Spring*

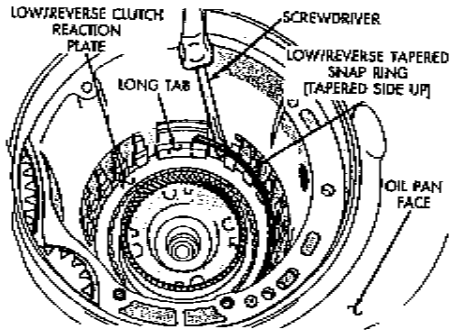


*Fig. 18—Tapered Snap Ring*

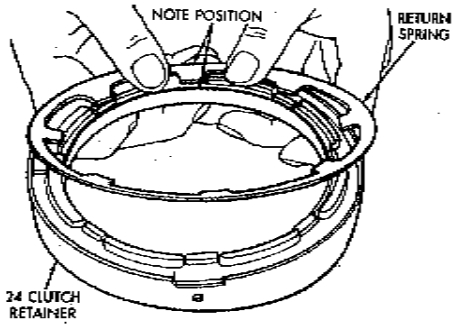


*Fig. 16—2/4 Retainer and Spring Indexed*





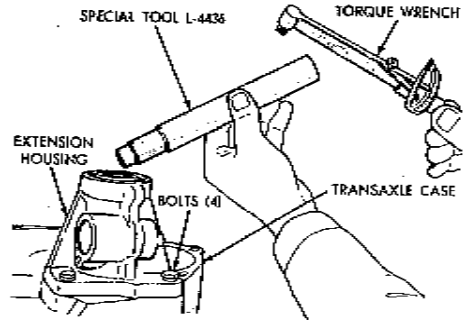


*Fig. 28—Tool L-4436 and Torque Wrench*

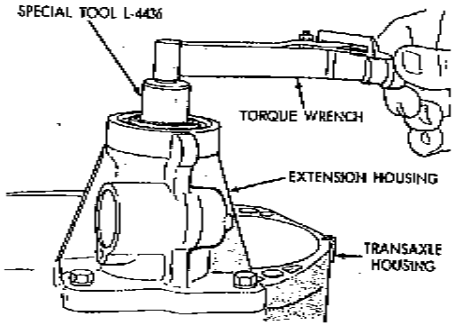


*Fig. 29—Checking Differential Bearings Turning Torque*

## BEARING ADJUSTMENT PROCEDURES

### GENERAL RULES ON SERVICING BEARINGS

(1) Take extreme care when removing and installing bearing cups and cones. **Use only an arbor press for installation, as a hammer may not properly align the bearing cup or cone.** Burrs or nicks on the bearing seat will give a false end play reading, while gauging for proper shims. Improperly seated bearing cup and cones are subject to low-mileage failure.

(2) Bearing cups and cones should be replaced if they show signs of pitting or heat distress.

If distress is seen on either the cup or bearing rollers, both cup and cone must be replaced.

**Bearing end play and drag torque specifications must be maintained to avoid premature bearing failures.**

Used (original) bearing may lose up to 50% of the original drag torque after break-in.

**All bearing adjustments must be made with no other component interference or gear inter-mesh, except the transfer gear bearing.**

### OUTPUT GEAR BEARINGS

The output gear tapered roller bearings must have a preload of .02 to .05 millimeter (.0008 to .002 inch).

### DIFFERENTIAL BEARING

(1) Remove the bearing cup from the differential bearing retainer using Tool L-4518, and remove the existing shim from under the cup.

(2) Install a .50 mm (.020 inch) gauging shim and reinstall the bearing cup into the retainer. Use an arbor press to install the cup.

**Oil Baffle is not required when making shim selection.**

### DIFFERENTIAL BEARING SHIM CHART

| End Play (with .50mm gauging shim installed) | | Required Shim Combination | Total Thickness | |
|---|---|---|---|---|
| mm | Inch | mm | mm | Inch |
| .0 | .0 | .50 | .50 | .020 |
| .05 | .002 | .75 | .75 | .030 |
| .10 | .004 | .80 | .80 | .032 |
| .15 | .006 | .85 | .85 | .034 |
| .20 | .008 | .90 | .90 | .035 |
| .25 | .010 | .95 | .95 | .037 |
| .30 | .012 | 1.00 | 1.00 | .039 |
| .35 | .014 | 1.05 | 1.05 | .041 |
| .40 | .016 | .50 + .60 | 1.10 | .043 |
| .45 | .018 | .50 + .65 | 1.15 | .045 |
| .50 | .020 | .50 + .70 | 1.20 | .047 |
| .55 | .022 | .50 + .75 | 1.25 | .049 |
| .60 | .024 | .50 + .80 | 1.30 | .051 |
| .65 | .026 | .50 + .85 | 1.35 | .053 |
| .70 | .027 | .50 + .90 | 1.40 | .055 |
| .75 | .029 | .50 + .95 | 1.45 | .057 |
| .80 | .031 | .50 + 1.00 | 1.50 | .059 |
| .85 | .033 | .50 + 1.05 | 1.55 | .061 |
| .90 | .035 | 1.00 + .60 | 1.60 | .063 |
| .95 | .037 | 1.00 + .65 | 1.65 | .065 |
| 1.00 | .039 | 1.00 + .70 | 1.70 | .067 |
| 1.05 | .041 | 1.00 + .75 | 1.75 | .069 |
| 1.10 | .043 | 1.00 + .80 | 1.80 | .071 |
| 1.15 | .045 | 1.00 + .85 | 1.85 | .073 |
| 1.20 | .047 | 1.00 + .90 | 1.90 | .075 |
| 1.25 | .049 | 1.00 + .95 | 1.95 | .077 |
| 1.30 | .051 | 1.00 + 1.00 | 2.00 | .079 |
| 1.35 | .053 | 1.00 + 1.05 | 2.05 | .081 |
| 1.40 | .055 | 1.05 + 1.05 | 2.10 | .083 |

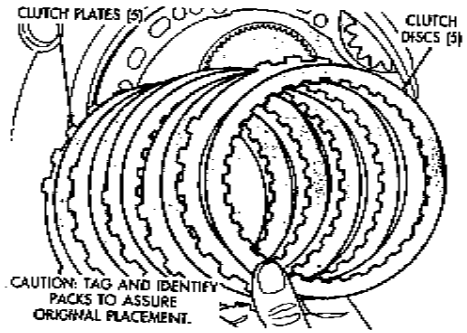


*Fig. 24—Low/Reverse Clutch Pack*

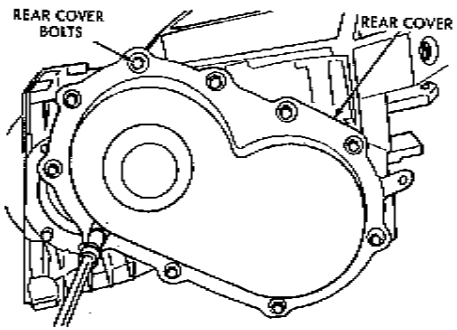


*Fig. 25—Rear Cover Bolts*

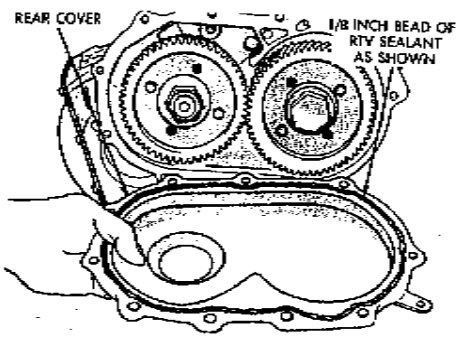


*Fig. 26—Rear Cover*

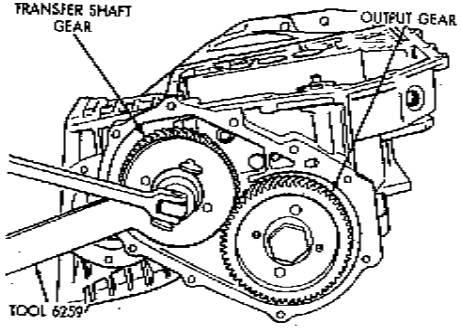


*Fig. 27—Remove Transfer Shaft Gear Nut*

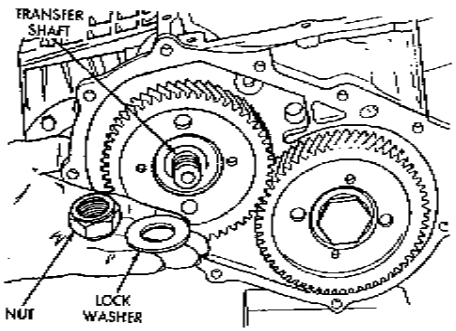


*Fig. 28—Transfer Shaft Gear Nut and Washer*

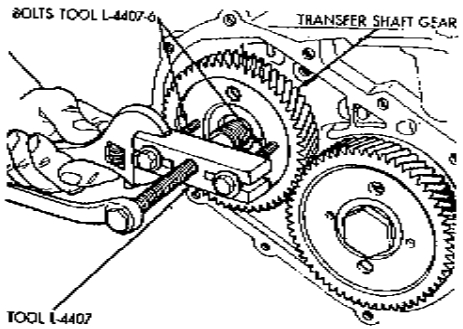


*Fig. 29—Remove Transfer Shaft Gear*





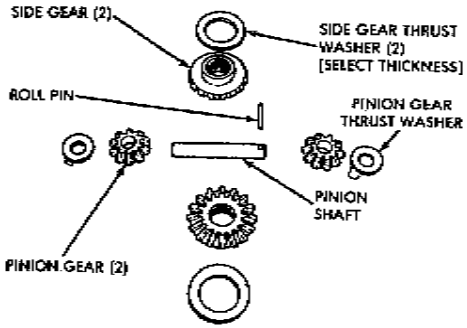


*Fig. 19—Differential Gears*

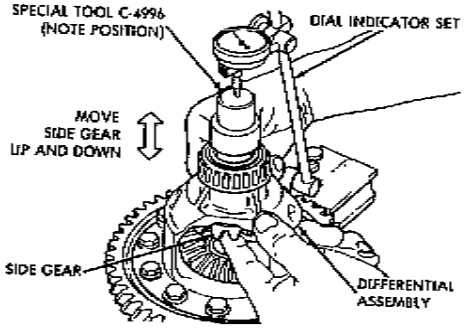


*Fig. 20—Checking Side Gear End Play*

**CAUTION: Side gear end play must be within .001 to .013 inch.**

**4 select thrust washers are available: .032, .037, .042, and .047 inch.**

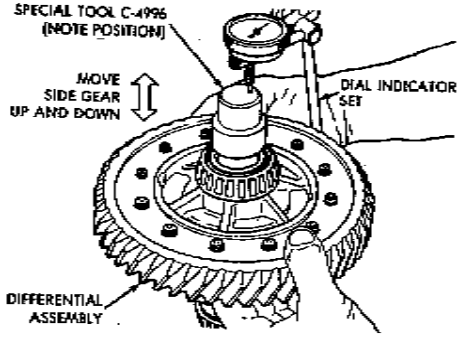


*Fig. 21—Checking Side Gear End Play*

**CAUTION: Side gear end play must be within .001 to .013 inch.**

**4 select thrust washers are available: .032, .037, .042, and .047 inch.**

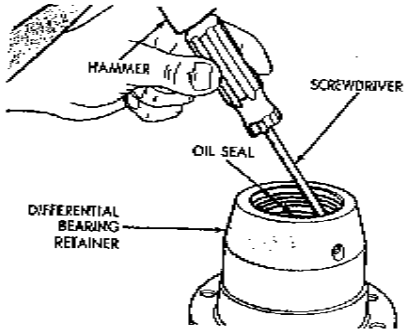


*Fig. 22—Remove Oil Seal*

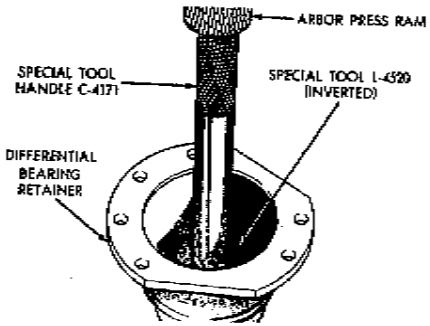


*Fig. 23—Install New Oil Seal*

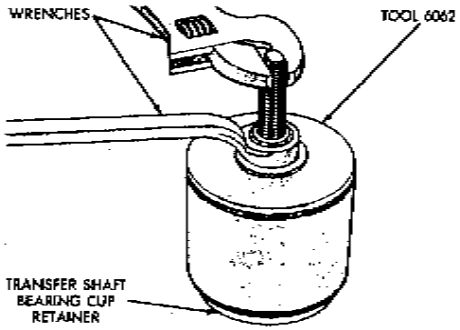


*Fig. 36—Remove Transfer Shaft Bearing Cup*

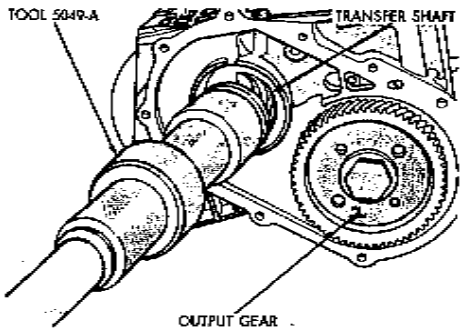


*Fig. 39—Transfer Shaft*

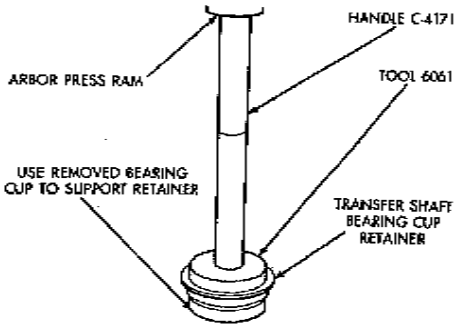


*Fig. 37—Install New Bearing Cup*

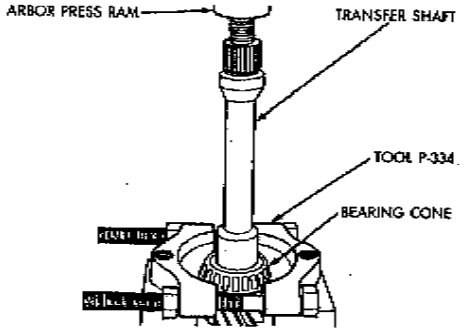


*Fig. 40—Remove Transfer Shaft Bearing Cone*

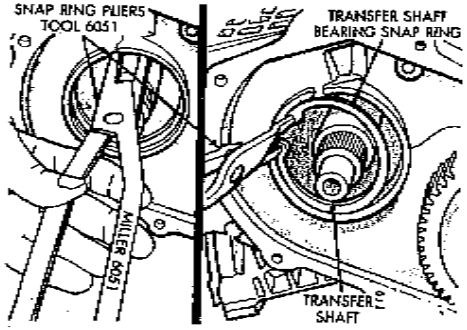


*Fig. 38—Transfer Shaft Bearing Snap Ring*

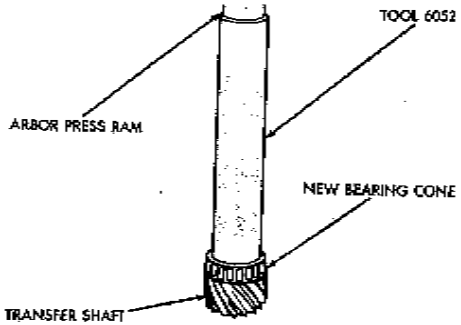


*Fig. 41—Install Bearing Cone*





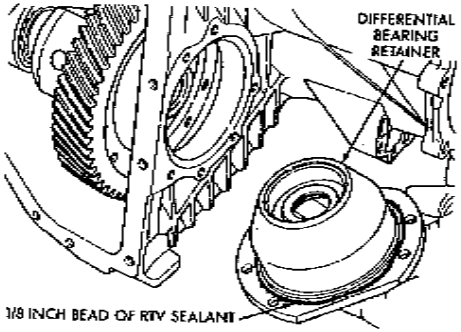


*Fig. 7—Differential Bearing Retainer*

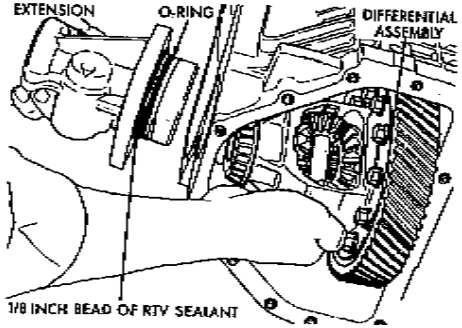


*Fig. 10—Differential and Extension*

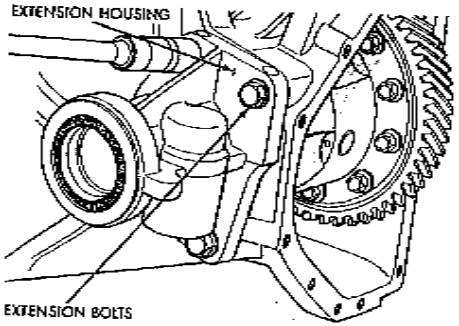


*Fig. 8—Extension Bolts*

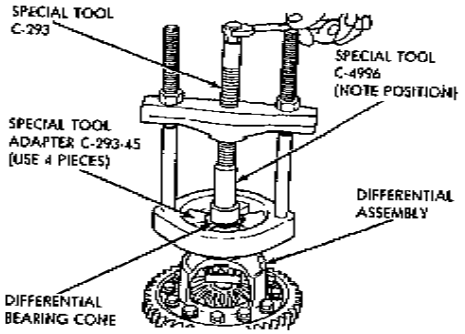


*Fig. 11—Remove Differential Bearing Cone*

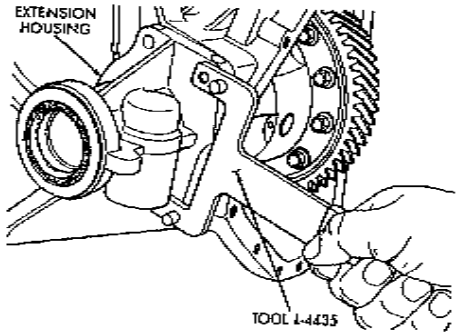


*Fig. 9—Remove or Install Extension*

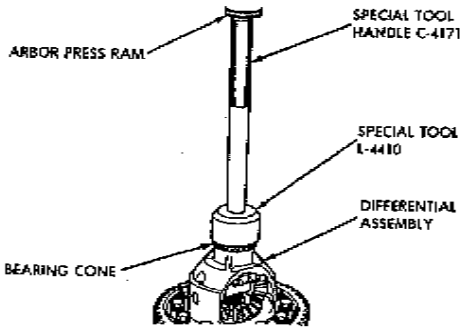


*Fig. 12—Install Differential Bearing Cone*

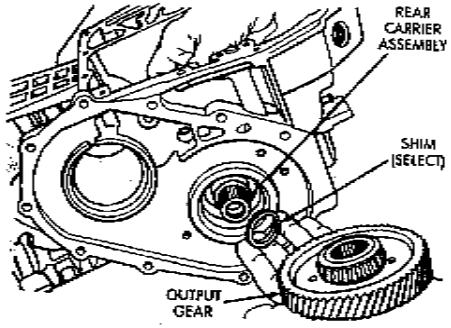


*Fig. 47—Output Gear and (Select) Shim*

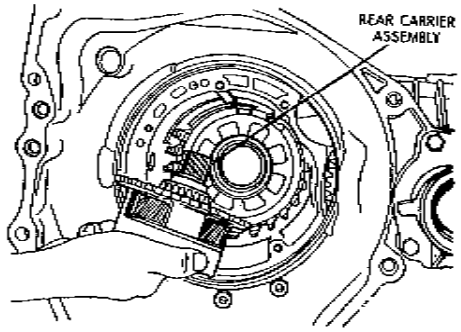


*Fig. 50—Rear Carrier Assembly*

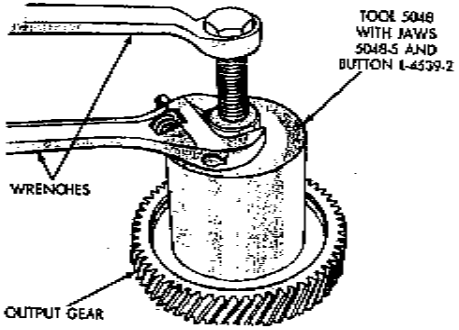


*Fig. 48—Remove Bearing Cone*

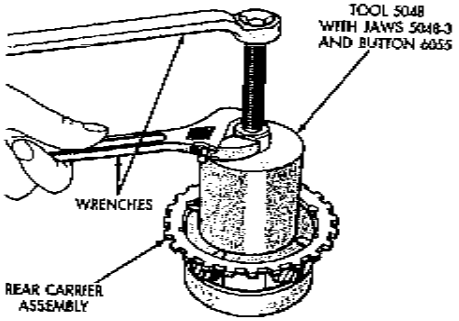


*Fig. 51—Remove Rear Carrier Bearing Cone*

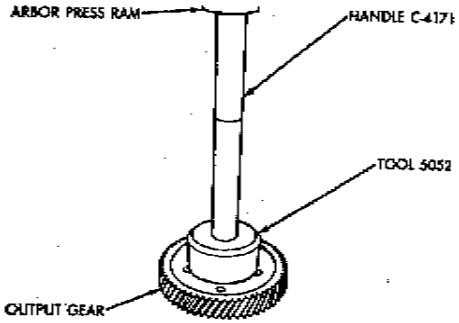


*Fig. 49—Install New Bearing Cone*

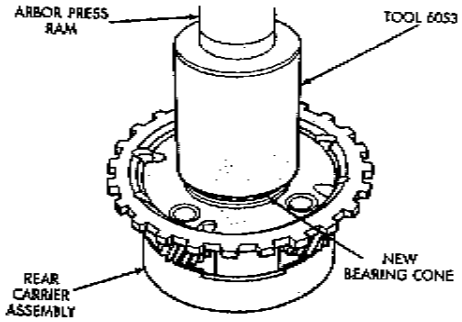


*Fig. 52—Install Rear Carrier Bearing Cone*





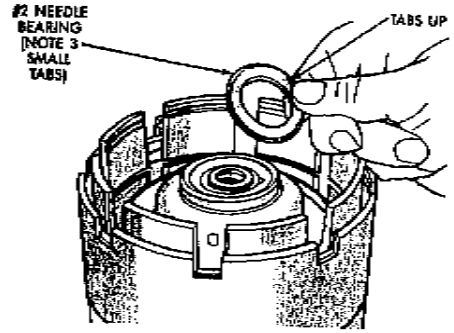


*Fig. 32—Install #2 Needle Bearing*

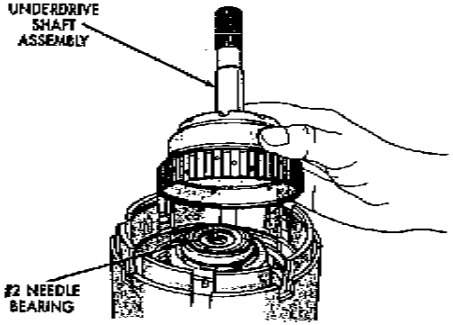


*Fig. 33—Install Underdrive Shaft Assembly*

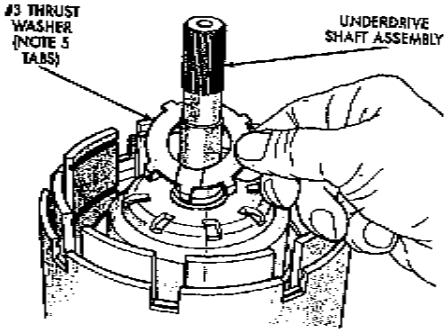


*Fig. 34—Install #3 Thrust Washer*

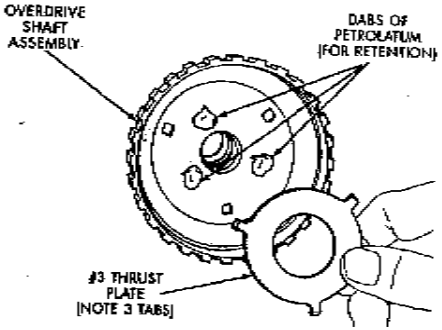


*Fig. 35—Install #3 Thrust Plate*

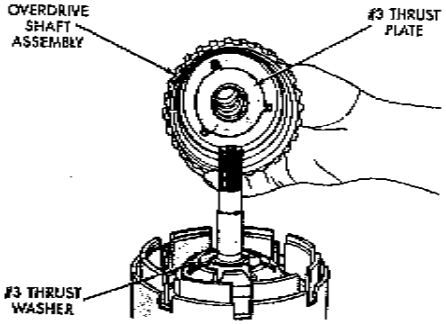


*Fig. 36—Install Overdrive Shaft Assembly*

Now that both shaft assemblies and thrust washers are properly installed, reinstall overdrive clutch and reverse clutch as shown in Figure 21 thru 29. **Rechecking these clutch clearances is not necessary, as they were set and approved previously.**

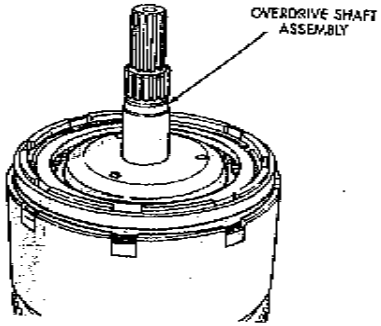


*Fig. 37—Input Shaft Clutches Assembly*

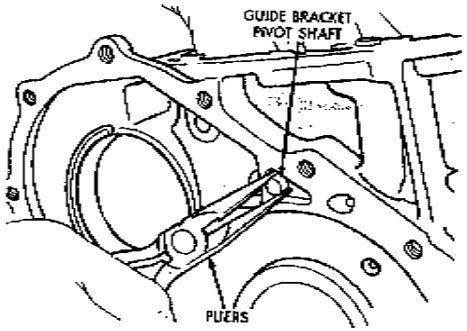


*Fig. 59—Guide Bracket Pivot Shaft*

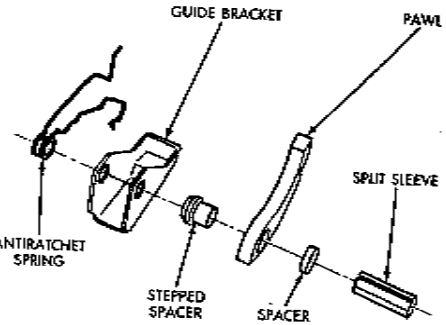


*Fig. 62—Guide Bracket Disassembled*

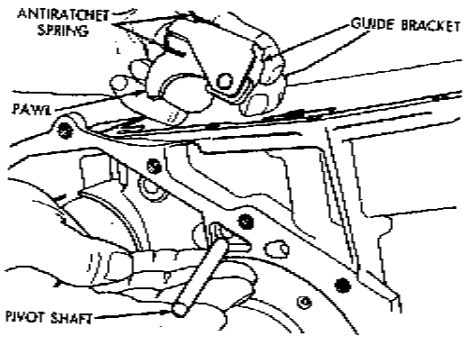


*Fig. 60—Pivot Shaft and Guide Bracket*

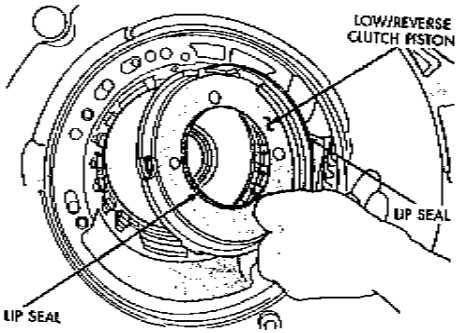


*Fig. 63—Low/Reverse Clutch Piston*

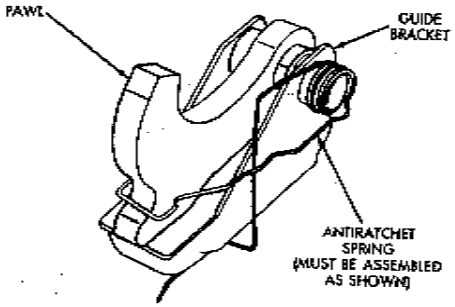


*Fig. 61—Guide Bracket Assembled*

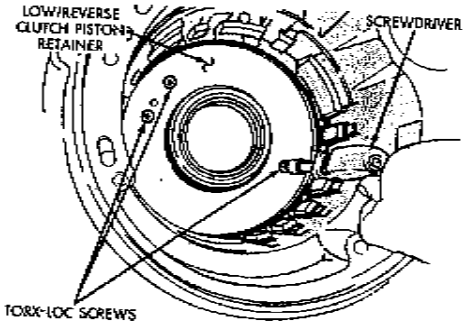


*Fig. 64—Piston Retainer Attaching Screws*





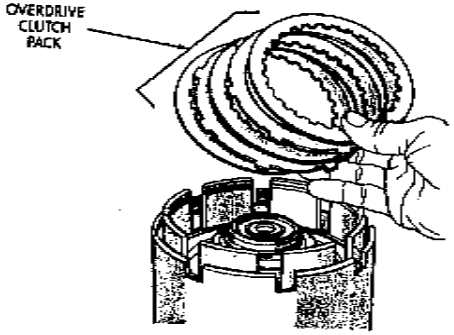


*Fig. 21—Install OD Clutch Pack*

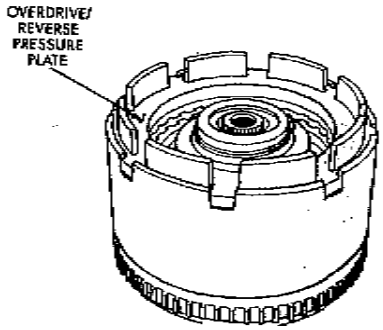


*Fig. 24—Pressure Plate Installed*

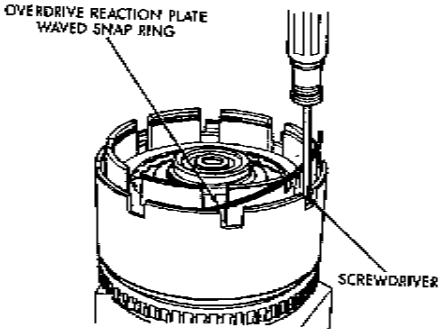


*Fig. 22—Install Waved Snap Ring*

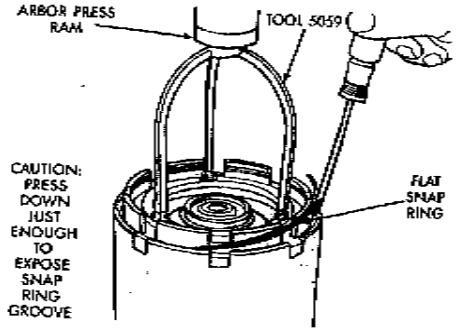


*Fig. 25—Install Flat Snap Ring*

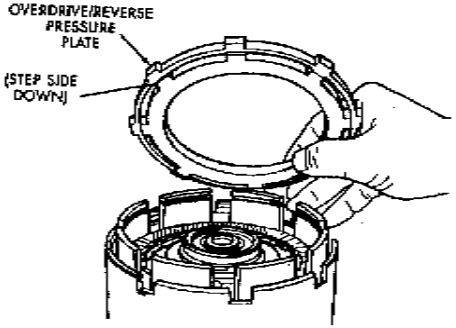


*Fig. 23—OD/Reverse Pressure Plate*

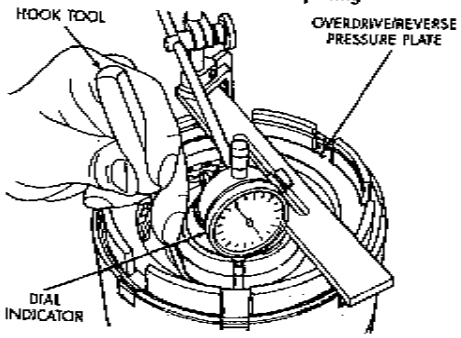


*Fig. 26—Check OD Clutch Pack Clearance*

**The overdrive (OD) clutch pack clearance is .042 to .096 inch.** If not within specifications, the clutch is not assembled properly. There is no adjustment for the OD clutch clearance.

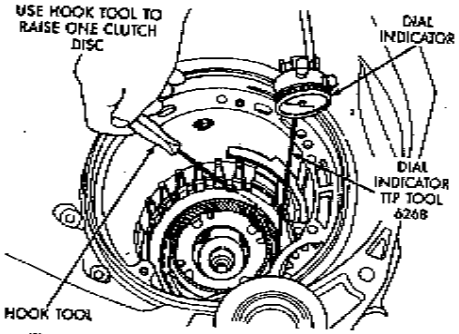


*Fig. 71—Check Low/Reverse Clutch Clearance*

Press down clutch pack with finger and zero dial indicator. **Low/Reverse clutch pack clearance is 1.04 to 1.65mm (.042 to .065 inch).**

Select the proper low/reverse reaction plate to achieve specifications:

| PART NO. | Thickness |
|---|---|
| 4377150 | 6.92 mm (.273 in.) |
| 4377149 | 6.66 mm (.262 in.) |
| 4377148 | 6.40 mm (.252 in.) |
| 4412268 | 6.14 mm (.242 in.) |
| 4412267 | 5.88 mm (.232 in.) |
| 4412266 | 5.62 mm (.221 in.) |
| 4412265 | 5.36 mm (.211 in.) |

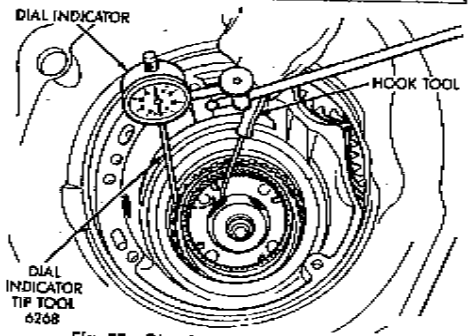


*Fig. 72—Check 2/4 Clutch Clearance*

Press down clutch pack with finger and zero dial indicator. **The 2/4 clutch pack clearance is 0.76 to 2.64mm (.030 to 104 inch).** If not within specifications, the clutch is not assembled properly. **There is no adjustment for the 2/4 clutch clearance.**

## DETERMINING #4 THRUST PLATE THICKNESS (Input Shaft End Play) (Figs. 73, 74, 75, and 76)

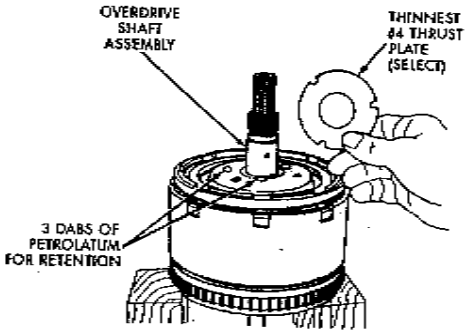


*Fig. 73—Select Thinnest #4 Thrust Plate*

To determine the proper thickness of the #4 thrust plate, select the thinnest #4 thrust plate. Using petrolatum (Fig. 73) to hold thrust plate in position, install input clutches retainer. Be sure the input clutches retainer is completely seated (Fig. 74).

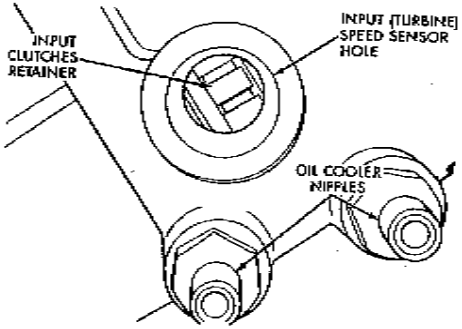


*Fig. 74—View Through Input Speed Sensor Hole*

**CAUTION: If view through input speed sensor hole is not as shown above, the input clutches assembly is not seated properly.**





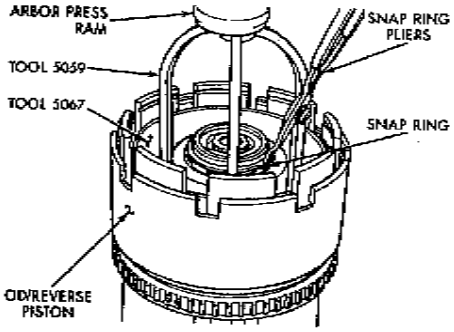


*Fig. 11—Install UD Spring Retainer and Snap Ring*

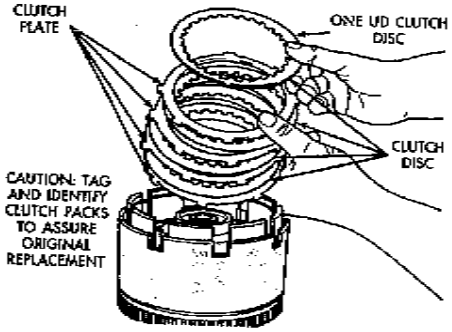


*Fig. 12—Underdrive Clutch Pack*

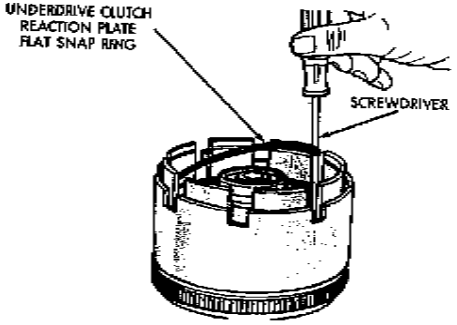


*Fig. 13—UD Clutch Flat Snap Ring*

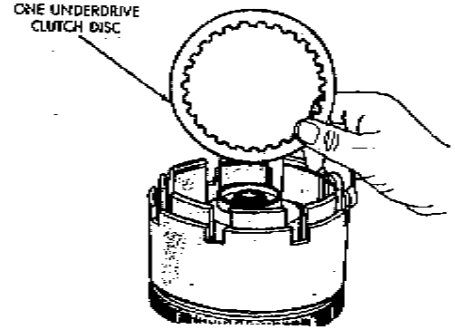


*Fig. 14—Install Last UD Clutch Disc*

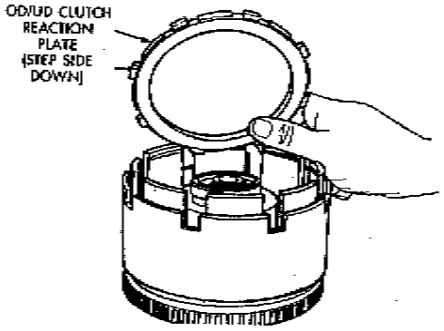


*Fig. 15—OD/UD Reaction Plate*

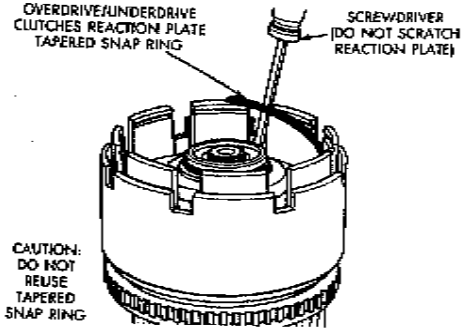


*Fig. 16—Tapered Snap Ring*

## SUBASSEMBLY RECONDITION

### Input Shaft Clutches Retainer Assembly

#### Disassembly

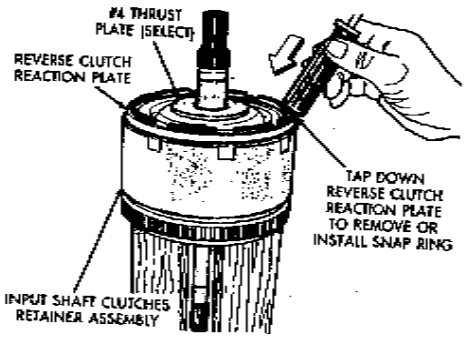


*Fig. 1—Tapping Reaction Plate*

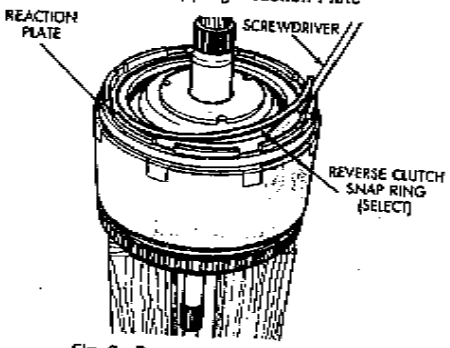


*Fig. 2—Reverse Clutch Snap Ring*

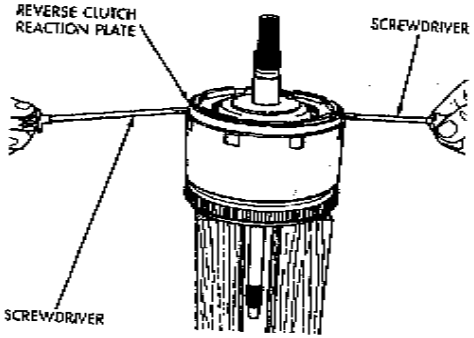


*Fig. 3—Pry Reverse Clutch Reaction Plate*

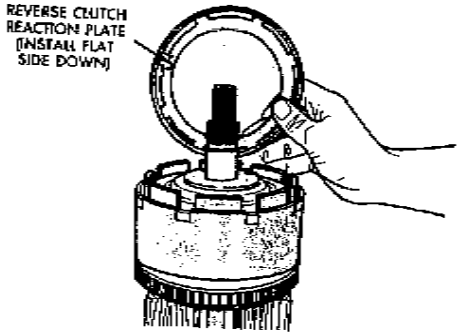


*Fig. 4—Reverse Clutch Reaction Plate*

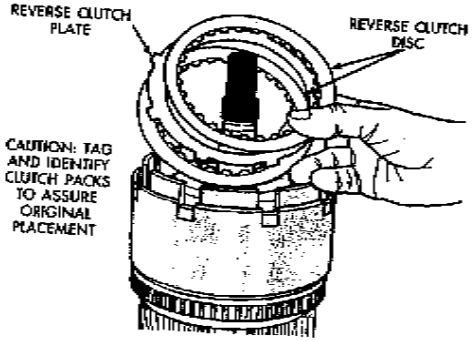


*Fig. 5—Reverse Clutch Pack*





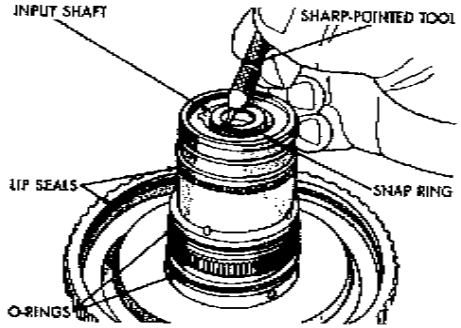


*Fig. 29—Remove Input Shaft Snap Ring*

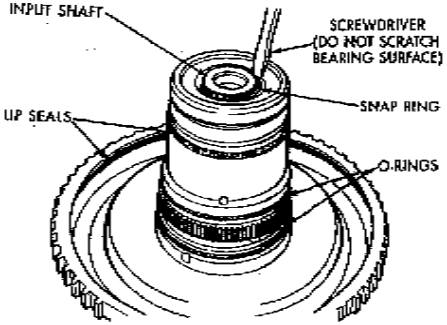


*Fig. 2—Install Input Shaft Snap Ring*

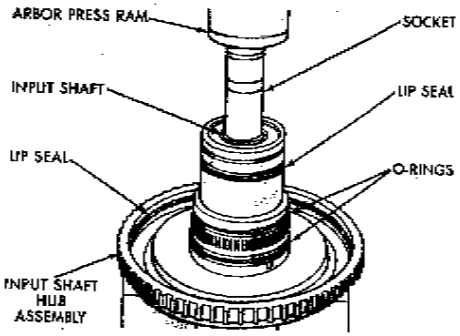


*Fig. 30—Remove Input Shaft*

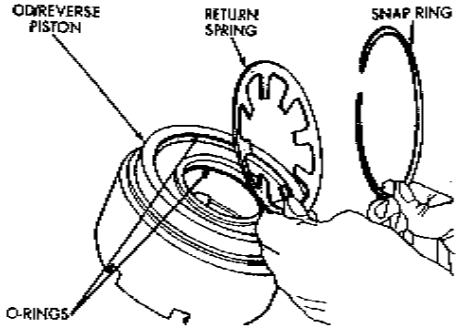


*Fig. 3—Return Spring and Snap Ring*

#### Assembly

Use petrolatum on all seals to ease assembly of components.

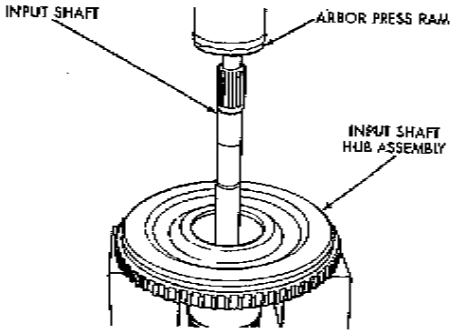


*Fig. 1—Install Input Shaft*

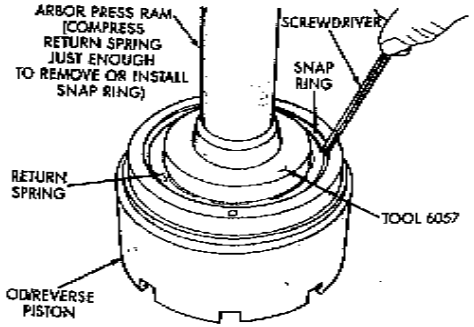


*Fig. 4—Install Snap Ring*

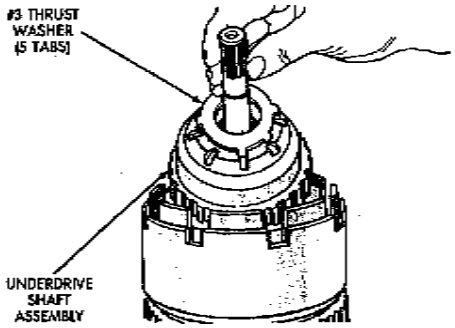


*Fig. 12—Underdrive Shaft Assembly*

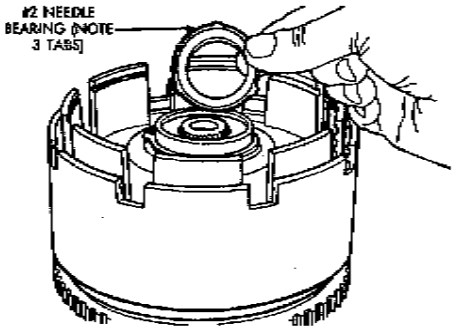


*Fig. 13—#2 Needle Bearing*

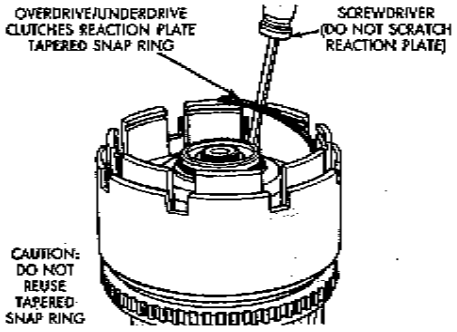


*Fig. 14—OD/UD Reaction Plate Tapered Snap Ring*

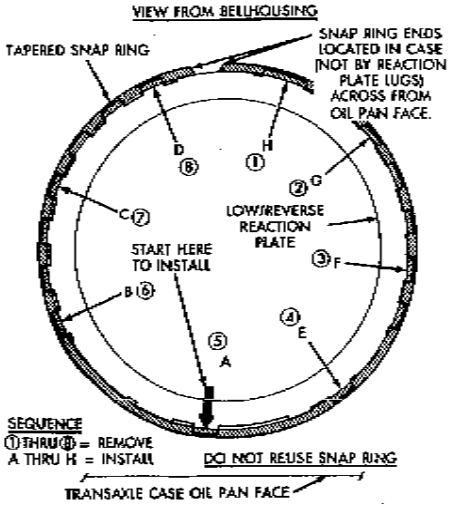


*Fig. 15—Tapered Snap Ring Instructions*

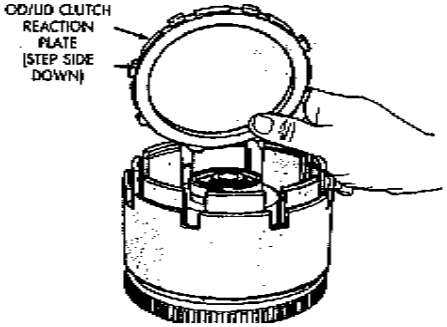


*Fig. 16—OD/UD Reaction Plate*





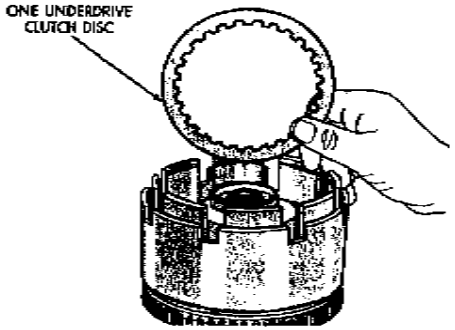


*Fig. 17—Remove One UD Clutch Disc*

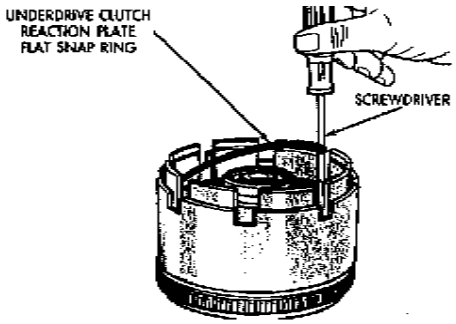


*Fig. 18—UD Clutch Flat Snap Ring*

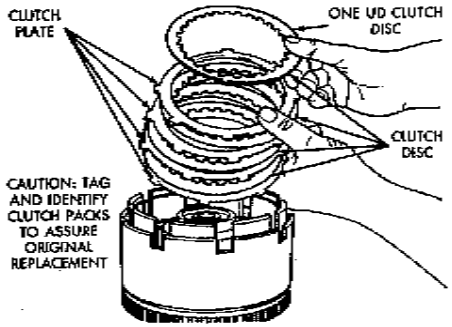


*Fig. 19—Underdrive Clutch Pack*

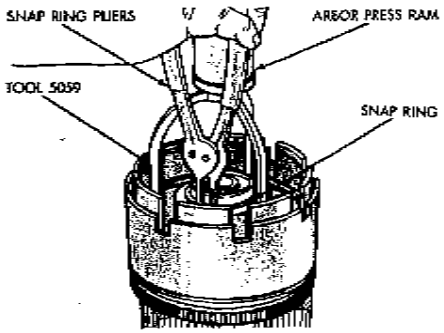


*Fig. 20—UD Spring Retainer Snap Ring*

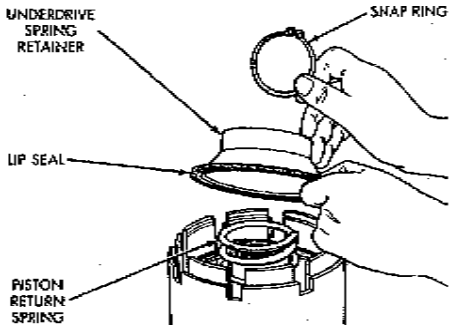


*Fig. 21—UD Return Spring and Retainer*

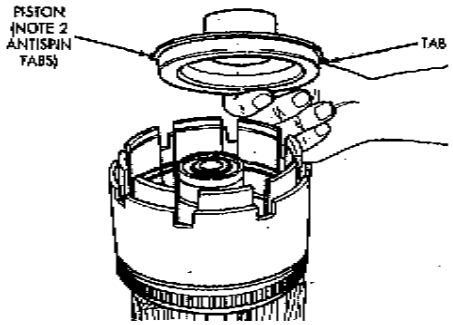


*Fig. 22—Underdrive Clutch Piston*